TECH BULLETIN
Installation Guide Update

SEPT 2023

REASON FOR UPDATE:

- **For applications without a jounce stop**
- Installation and fitment requirements

Applications	
Year	**2017-2023**
Make	**Ford**
Models	**F250/F350/F450 (4WD)**

IMPACTED PART NUMBERS:

- W217602625 – Ride Rite
- W217602716 – RED Label
- W217602845 – All In One Analog
- W217602854 – All In One Wireless

Installation Update:

- If utilizing the 1.5” spacer (5336) during the installation of 2625, 2716, 2845, or 2854, install part number 2335820045 inside the spacer to fill the gap between the lower bracket and the spacer.
- Utilizing the puck will not require different hardware to secure the air spring to the lower bracket. See “Diagram 1”.
- If your kit did not come with part number 2335820045, or if you need additional information, please contact tech support at: 800-888-0650 or email rrtech@fsip.com.

Installation Update:

- When securing the air springs to the lower brackets, use part number 3514 (1.0” Flat Head Cap Screws) when the 1.5” spacer (5336) is **not** being used.
- When using the 1.5” spacer (5336), use part number 3430 (2.0” Flat Head Cap Screws) to secure the air spring to the air springs to the lower brackets.

Installation Update:

- See Diagram 2 for proper installation of the axle extension bracket. If there is no jounce stop installed, the axle extension bracket must be used in those applications.

For the most current installation instructions, please visit: https://www.firestoneairide.com/kit-search/ and search by kit number or application.

© Firestone Airide, a Division of Firestone Industrial Products Company, LLC

AIRIDE

TECH BULLETIN

Installation Guide Update

Diagram 1

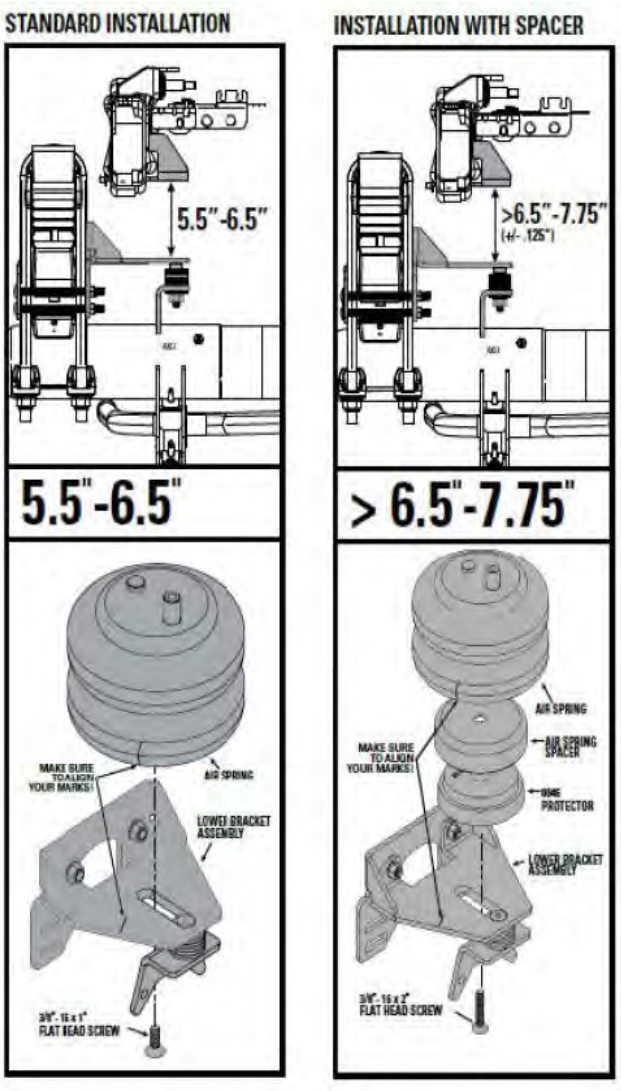

Diagram 2

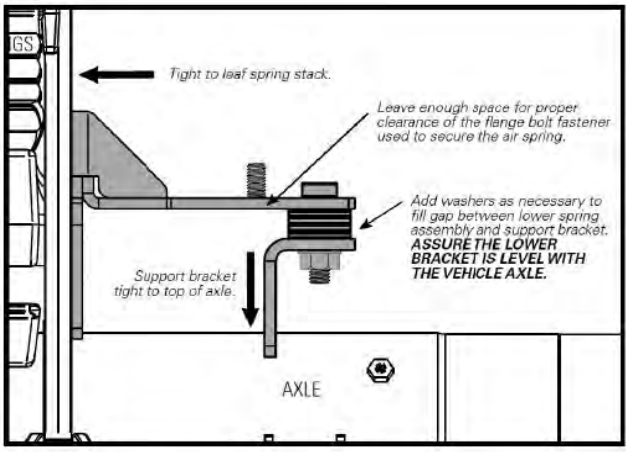

© Firestone Airide, a Division of Firestone Industrial Products Company, LLC

TECH BULLETIN
Installation Guide Update

SEPT 2023

REASON FOR UPDATE:

- **For applications with a jounce stop**
- Installation and fitment requirements

Applications	
Year	**2017-2023**
Make	**Ford**
Models	**F250/F350/F450 (4WD)**

IMPACTED PART NUMBERS:

- W217602625 – Ride Rite
- W217602716 – RED Label
- W217602845 – All In One Analog
- W217602854 – All In One Wireless

Installation Update:

- If utilizing the 1.5” spacer (5336) during the installation of 2625, 2716, 2845, or 2854, install part number 2335820045 inside the spacer to fill the gap between the lower bracket and the spacer.
- Utilizing the puck will not require different hardware to secure the air spring to the lower bracket. See “Diagram 1”.
- If your kit did not come with part number 2335820045, or if you need additional information, please contact tech support at: 800-888-0650 or email rrtech@fsip.com.

Installation Update:

- When securing the air springs to the lower brackets, use part number 3514 (1.0” Flat Head Cap Screws) when the 1.5” spacer (5336) is not being used.
- When using the 1.5” spacer (5336), use part number 3430 (2.0” Flat Head Cap Screw) to secure the air spring to the air springs to the lower brackets.
- Do not use the 1” Flange Bolt (3106) or the 2” Flange Bolt (3150) to secure the air spring to the lower bracket. Using the Flange Bolts will not allow the lower bracket (5938) to sit down on the jounce stop. See “Diagram 1”:

Installation Update:

- When installing the lower bracket (5938 or 5948) be sure that the bracket is sitting down on the jounce stop. See “Diagram 2”:

For the most current installation instructions, please visit: https://www.firestoneairide.com/kit-search/ and search by kit number or application.

© Firestone Airide, a Division of Firestone Industrial Products Company, LLC

TECH BULLETIN

Installation Guide Update

Diagram 1

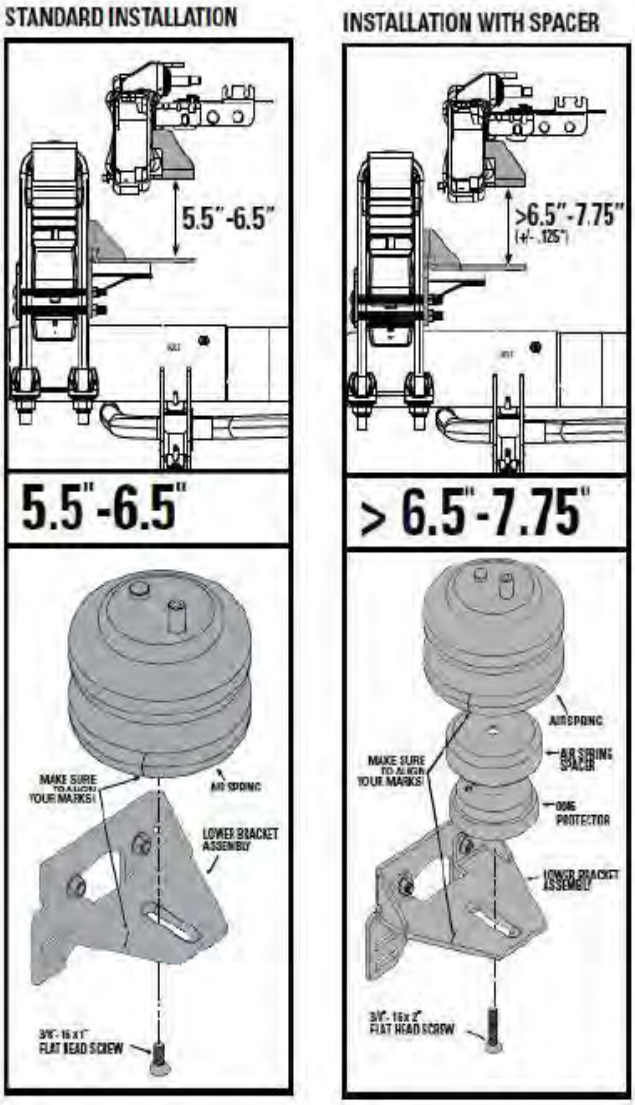

Diagram 2

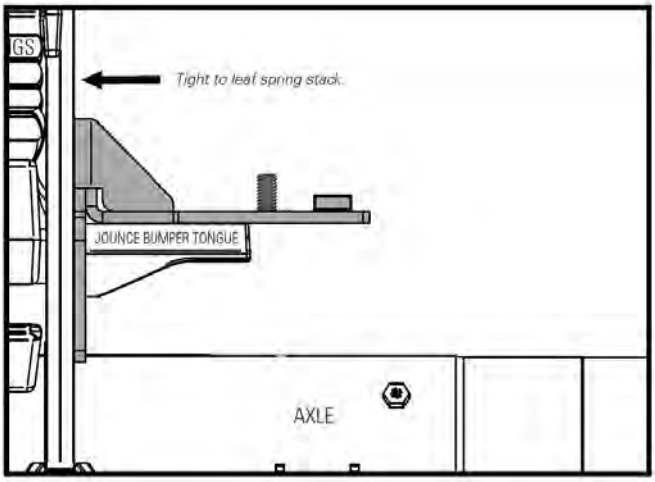

© Firestone Airide, a Division of Firestone Industrial Products Company, LLC

2625

RIDE-RITE™

AIR HELPER SPRINGS

riderite.com

INSTALLATION INSTRUCTIONS

! **Does your vehicle have an aftermarket lift kit?** See step 8.
You may need to purchase a spacer in order to use this kit.

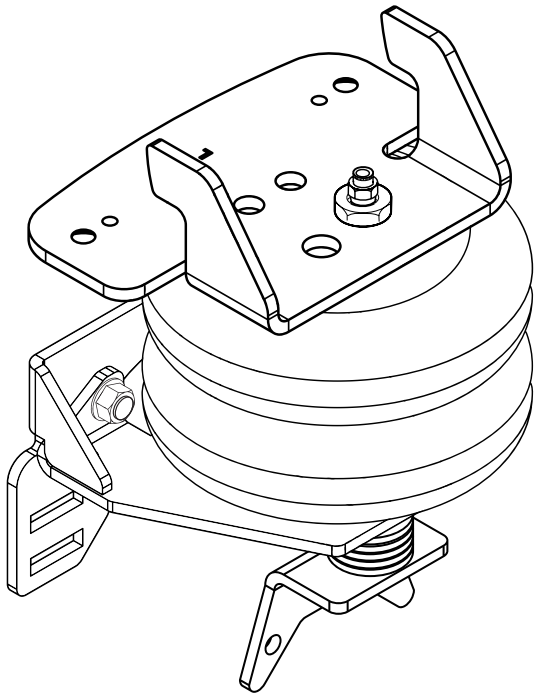

Firestone

Firestone Industrial Products

! IMPORTANT

PLEASE DON'T HURT YOURSELF, YOUR KIT OR YOUR VEHICLE. TAKE A MINUTE TO READ THIS IMPORTANT INFORMATION.

DO NOT INSTALL IF THE TRUCK HAS BEEN LIFTED AND THE STOCK JOUNCE BUMPER TONGUES ARE NOT ON THE VEHICLE. *This kit is to be used on a* ***pickup truck only****, and* ***DOES NOT INCREASE YOUR VEHICLE'S MAXIMUM LOAD.***

SAFE INSTALLATION

Please take all safety precautions during installation. A hydraulic jack can fail, and if that happens, you can be seriously hurt, or worse, if you are relying on it to hold up the vehicle. If you use a hydraulic jack, secure jack stands in the appropriate locations and chock any tires still touching the ground.

Wear safety glasses or goggles. Your eyes may be lower than some parts and pieces, and you don't want to lose an eye.

Remove the possibility of any electrical issues by disconnecting the negative battery cable.

KIT CLEARANCE

There must be a minimum of 1/2" clearance around all installed components when the air springs are inflated and under a load. The air springs must flex and expand during operation, so the clearance keeps the kit from rubbing against parts of the vehicle.

VEHICLE GVWR

NEVER exceed the maximum load recommended by the vehicle manufacturer (GVWR). The GVWR can be found in your vehicle's owner's manual or on the data plate on the driver's side door. Consult your local dealership for additional GVWR specifications.

INFLATING THE AIR SPRINGS

When inflating air springs, add air pressure in small quantities, checking air pressure frequently. The air springs have much less air volume than a tire, so they inflate much more quickly.

PRESSURE TO LOAD

The air springs will support approximately 50 lbs. of load for each PSI of inflation pressure (per pair). For example, 50 PSI of inflation pressure will support a load of 2500 lbs. per pair of air springs.

APPROPRIATE AIR PRESSURE

For best ride, use only enough air pressure in the air springs to level the vehicle when viewed from the side (front to rear). This will vary, depending on the load, location of the load, condition of the existing suspension, and personal preference.

OPTIONAL T-FITTING

This kit includes inflation valves and air line tube for each air spring, allowing you to compensate for unbalanced loads. If you prefer a single inflation valve system to provide equal pressure to both air springs, your dealer can supply the optional "T" fitting (Part # 3025 or WRI-760-3461 retail pack).

ONCE INSTALLED SUCCESSFULLY, FOLLOW THESE PRESSURE REQUIREMENTS FOR THE AIR SPRINGS:

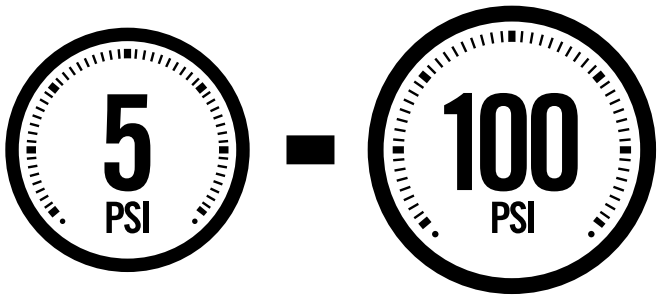

MINIMUM PRESSURE ***MAXIMUM PRESSURE (LOADED)***

PARTS

Compare the parts below to your kit. Assure you have all pieces, and organize them for an easier installation.

MAIN KIT CONTENTS

PT # 6397		x 2 AIR SPRING	PT # 5939	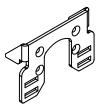	x 2 LOWER FRAME BRACKET	PT # 5940	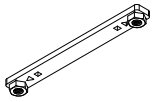	x 2 THREAD PLATE
PT # 5872	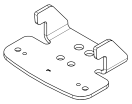	x 1 UPPER LEFT BRACKET	PT # 5942	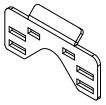	x 2 LEAF SPRING BRACKET	PT # 1004		x 1 HEAT SHIELD
PT # 5873	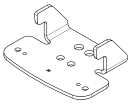	x 1 UPPER RIGHT BRACKET	PT # 5941		x 2 SUPPORT BRACKET	PT # 9415		x 1 AIR LINE TUBE (22 FEET)
PT # 5938	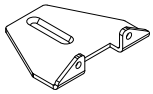	x 2 LOWER SPRING BRACKET	PT # 5336	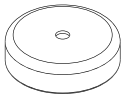	x 2 AIR SPRING SPACER			

A24-760-7560 INFLATION VALVE BRACKET KIT

PT # 9483		x 1 NO-DRILL INFLATION VALVE BRACKET	PT # 9488	 x 2 LARGE NYLON TIE

A21-760-2625 HARDWARE PACK

PT # 3022		x 18 3/8″ - 16 FLANGE LOCK NUT	PT # 3514		x 6 3/8" - 16 x 1" FLAT HEAD CAP SCREW	PT # 3032	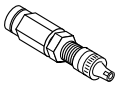	x 2 INFLATION VALVE AND VALVE CAP ASSEMBLY
PT # 3033		x 4 5/16" FLAT WASHER	PT # 3430		x 6 3/8" - 16 x 2" FLAT HEAD CAP SCREW	PT # 3055		x 2 AIR FITTING
PT # 3106		x 2 3/8" - 16 x 1" FLANGE BOLT	PT # 3515		x 6 3/8" - 16 x 2.5" FLAT HEAD CAP SCREW	PT # 3502		x 8 3/8" - 16 x 6" CARRIAGE BOLT
PT # 3150		x 2 3/8" - 16 x 2" FLANGE BOLT	PT # 3332		x 2 5/8″ - 18 NYLON JAM NUT	PT # 9036		x 10 RED NYLON TIE
PT # 0532		x 18 3/8" FLAT WASHER	PT # 5224		x 2 SPACER	PT # 0899	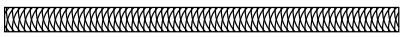	x 2 THERMAL SLEEVE

CONTENTS AND OVERVIEW

PAGE 4	REMOVE EXISTING JOUNCE BUMPER & INSTALL THREAD PLATE
PAGE 5	INSTALL UPPER BRACKET
PAGE 6	CREATE LOWER BRACKET ASSEMBLY
PAGE 7	DRY FIT AIR SPRING
PAGE 8	MAKE ALIGNMENT MARKS
PAGE 9	DRY FIT LOWER BRACKET ASSEMBLY
PAGE 10	MEASURE BETWEEN BRACKETS AND INSTALL AIR SPRING
PAGE 11	INSTALL AIR SPRING TO UPPER BRACKET
PAGE 12	INSTALL LOWER BRACKET ASSEMBLY
PAGE 13	INSTALL HEAT SHIELD ON RIGHT SIDE
PAGE 14	AIR LINE TUBE & INFLATION VALVE INSTALLATION
PAGE 15	INSTALL & ROUTE AIR LINE TUBE
PAGE 16	CHECKING THE SYSTEM
PAGE 17	FIXING AN AIR LEAK
PAGE 18	FINISHING THE INSTALLATION

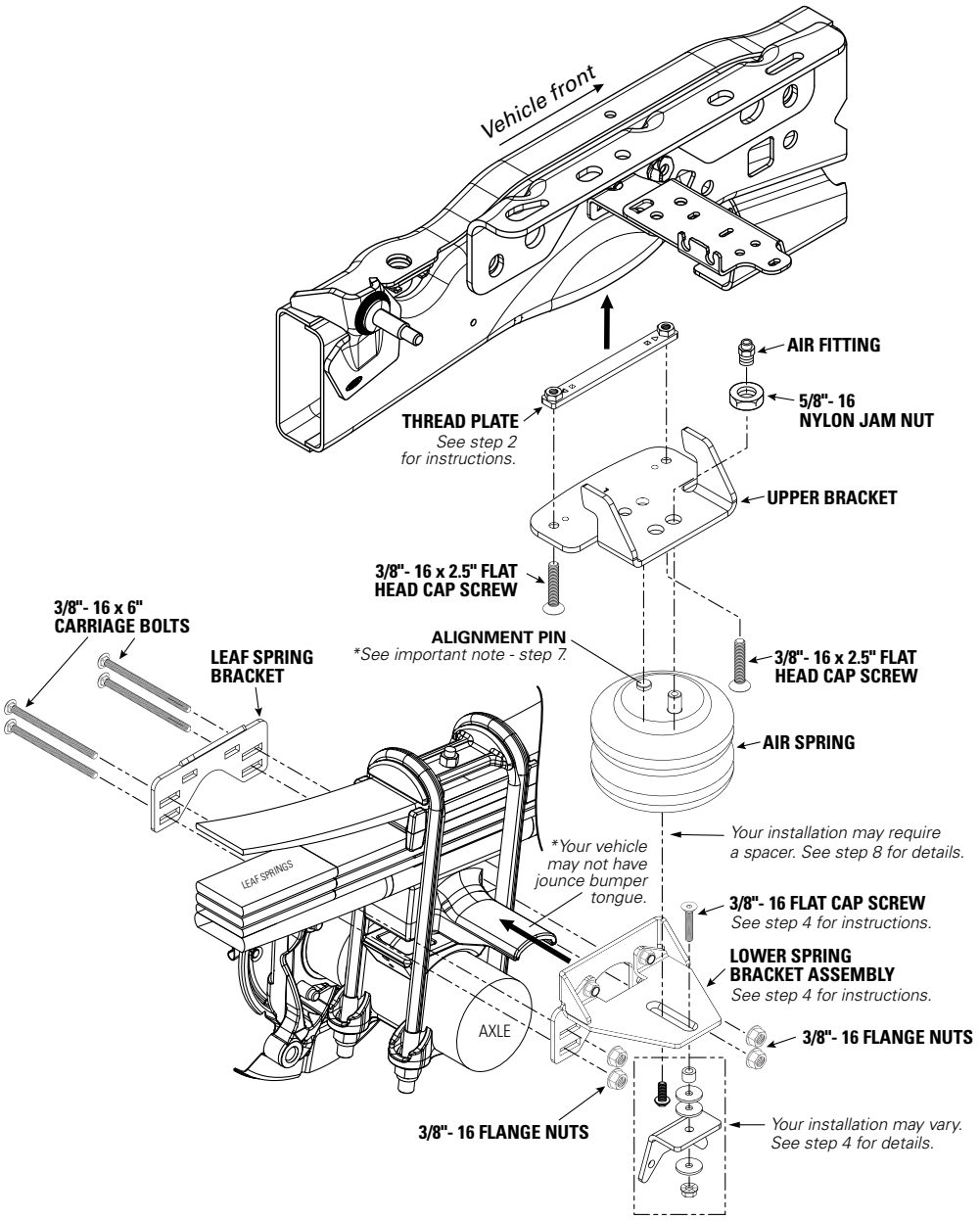

! IMPORTANT NOTE

If necessary for installation clearance, slightly bend the brackets on the left (driver) side which supports the brake line and axle vent tube. After removing the plastic ABS mount from its hole in the axle bracket, use an adjustable wrench or similar tool to bend the bracket approximately 1/8" (3mm). Replace the ABS mount when proper clearance is obtained.

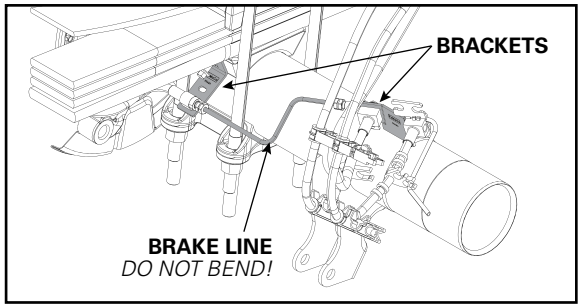

REMOVE EXISTING JOUNCE BUMPER 1

START ON THE LEFT SIDE OF THE VEHICLE WHILE FACING FORWARD.

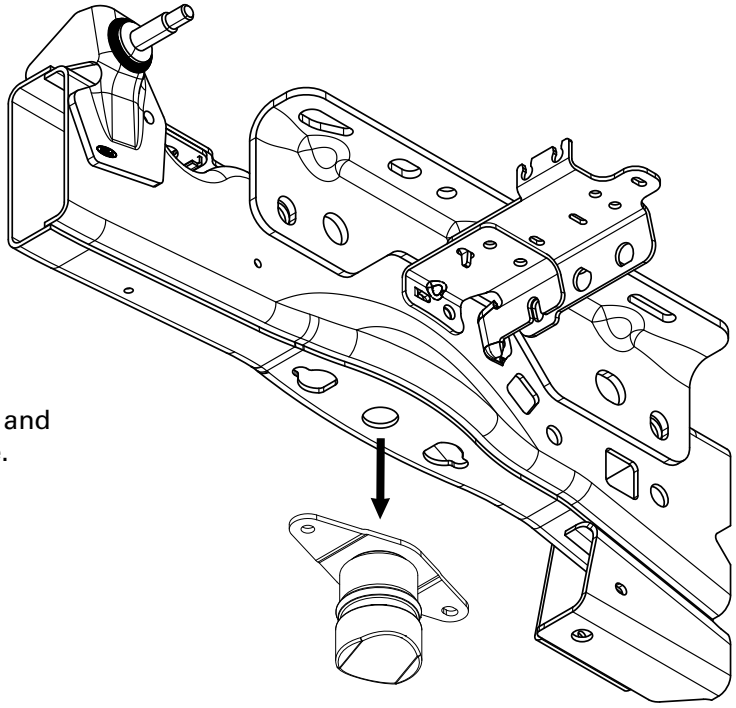

Remove the existing jounce bumper and fastener clips from the vehicle frame.

INSTALL THREAD PLATE 2

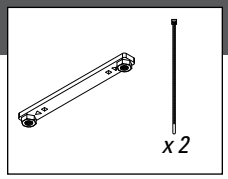

Attach nylon ties to the thread plate, as shown. These act as installation guides for the thread plate and upper bracket. They will be removed in a later step.

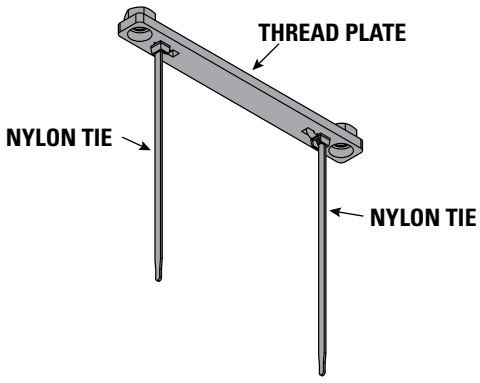

Insert the thread plate into the vehicle frame, as shown. Use nylon ties as handles to position thread plate.

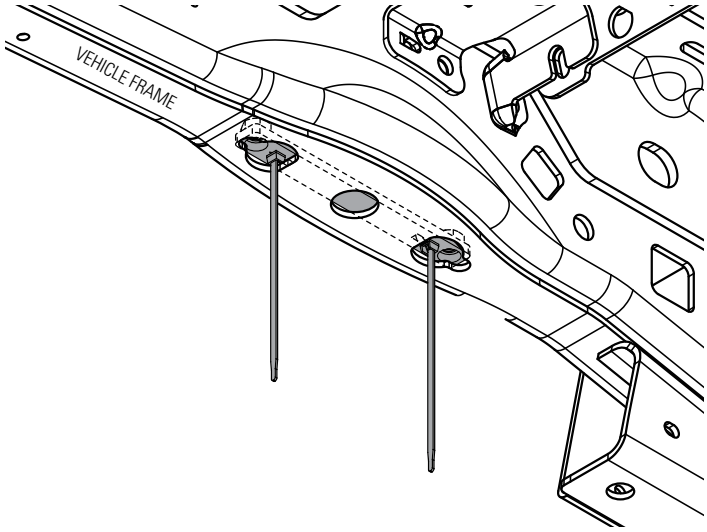

3 INSTALL UPPER BRACKET

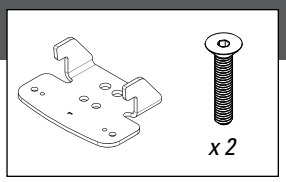

1 Guide the two nylon ties into the inner holes in the upper bracket.

2 While holding the thread plate in place with the nylon ties, **hand-thread** the fasteners in place.

3 Once the fasteners have begun engaging the threads, use snips or a knife to trim the nylon ties flush with the frame.

4 **Fully-tighten the fasteners.**

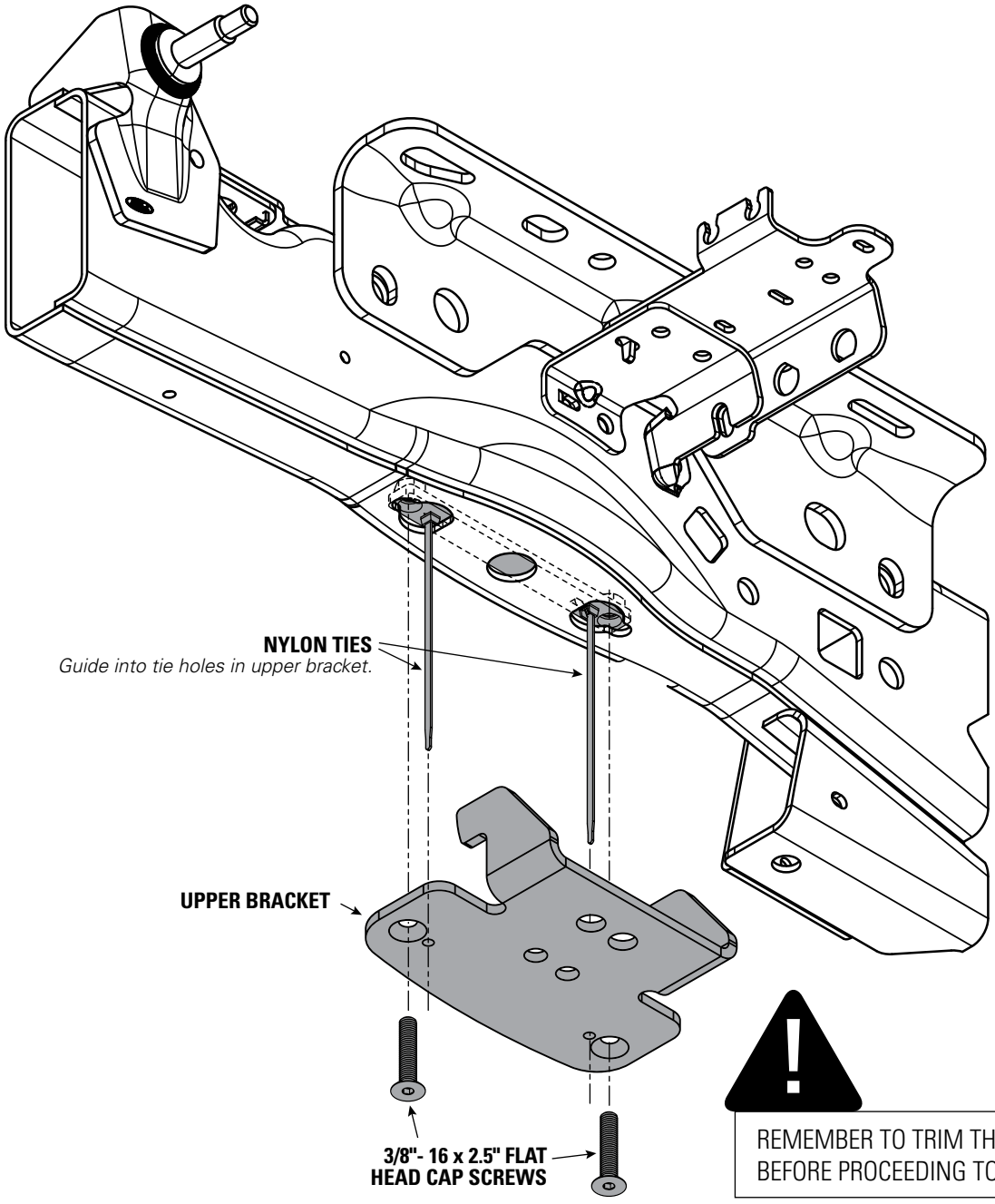

REMEMBER TO TRIM THE NYLON TIES BEFORE PROCEEDING TO THE NEXT STEP.

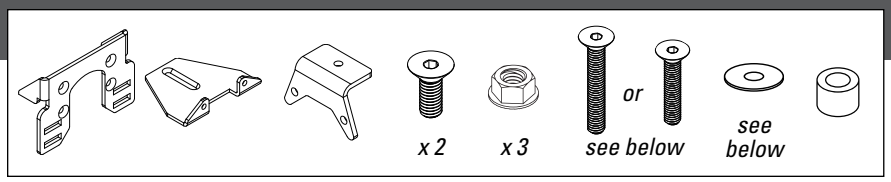

Fasten the lower spring bracket to the lower frame bracket, as shown. **Assure that the lower spring bracket flanges are pointing upward.**

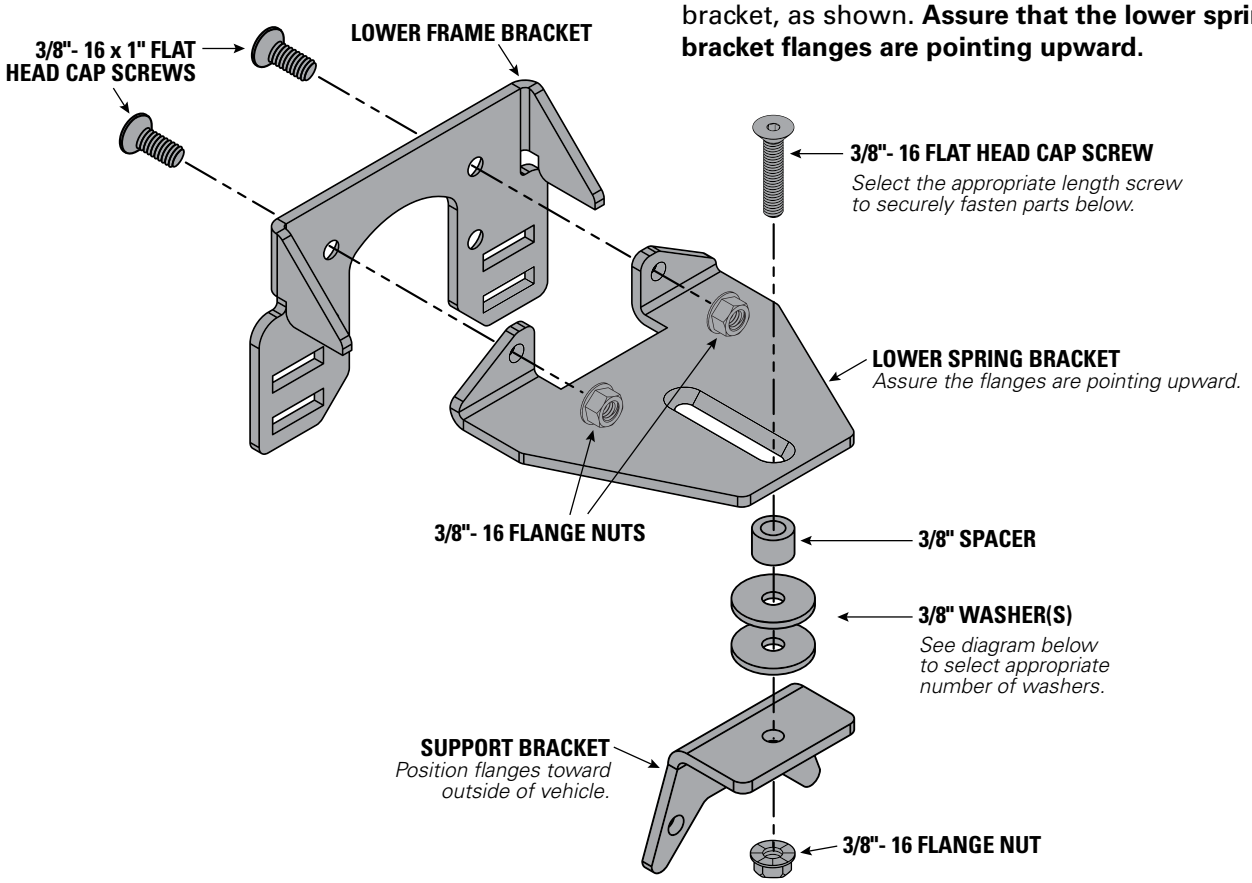

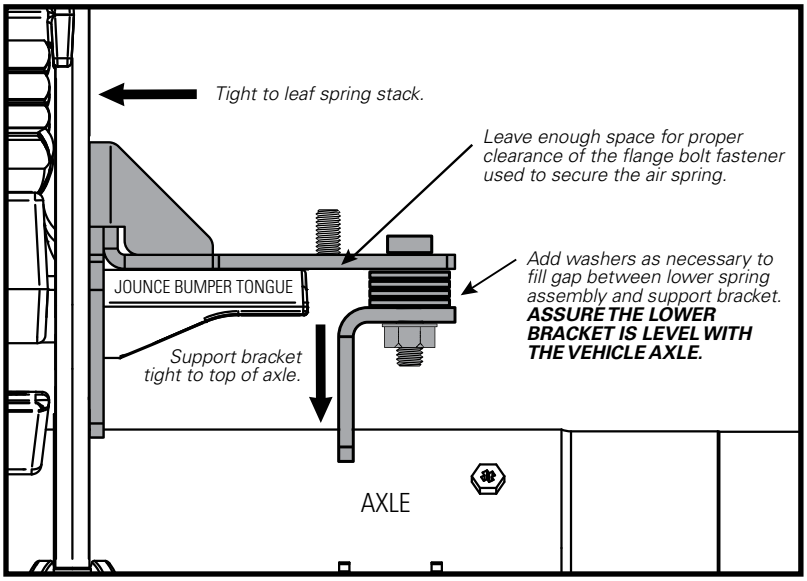

DRY FIT TO DETERMINE WASHERS

Place the lower bracket assembly tight to the leaf springs. If your vehicle has a jounce bumper tongue, leave enough space to allow proper clearance for the flange bolt used to secure the air spring, as shown.

Position the support bracket so it is **tight** to the top of the axle. Install selected 3/8"-16 flat head cap screw, spacer, and enough washers to fill the gap and provide enough space for the flat head bolt, as shown. **ASSURE THE LOWER BRACKET IS LEVEL WITH THE VEHICLE AXLE.**

Fully-tighten the 3/8"-16 flange nut to the flat head cap screw.

5 DRY FIT AIR SPRING

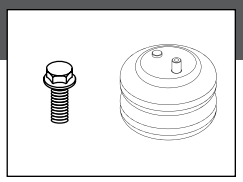

Fasten the air spring to the lower spring bracket.
DO NOT FULLY TIGHTEN AT THIS STAGE.

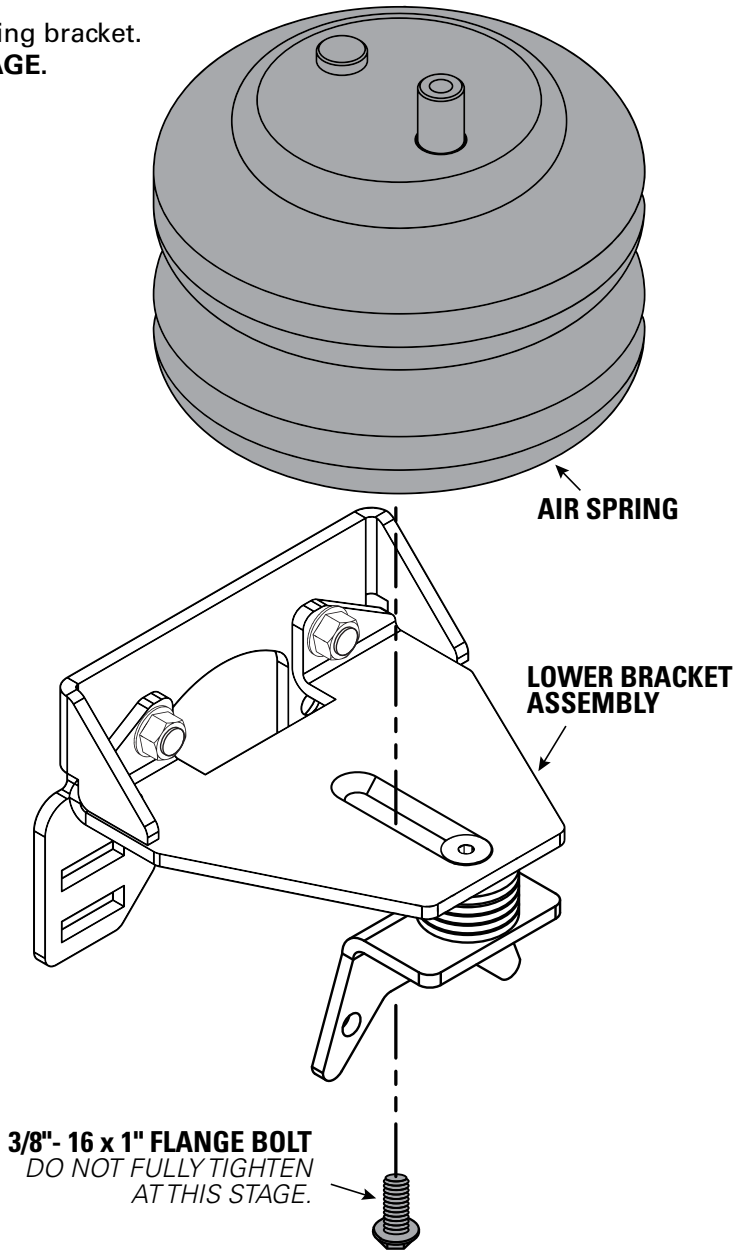

1 Insert the air spring alignment pin and combo stud into the front alignment holes, as shown.

2 Position the lower bracket assembly tight to the u-bolts and assure the combo stud and alignment pin are fully seated.

3 Make alignment marks, as shown.

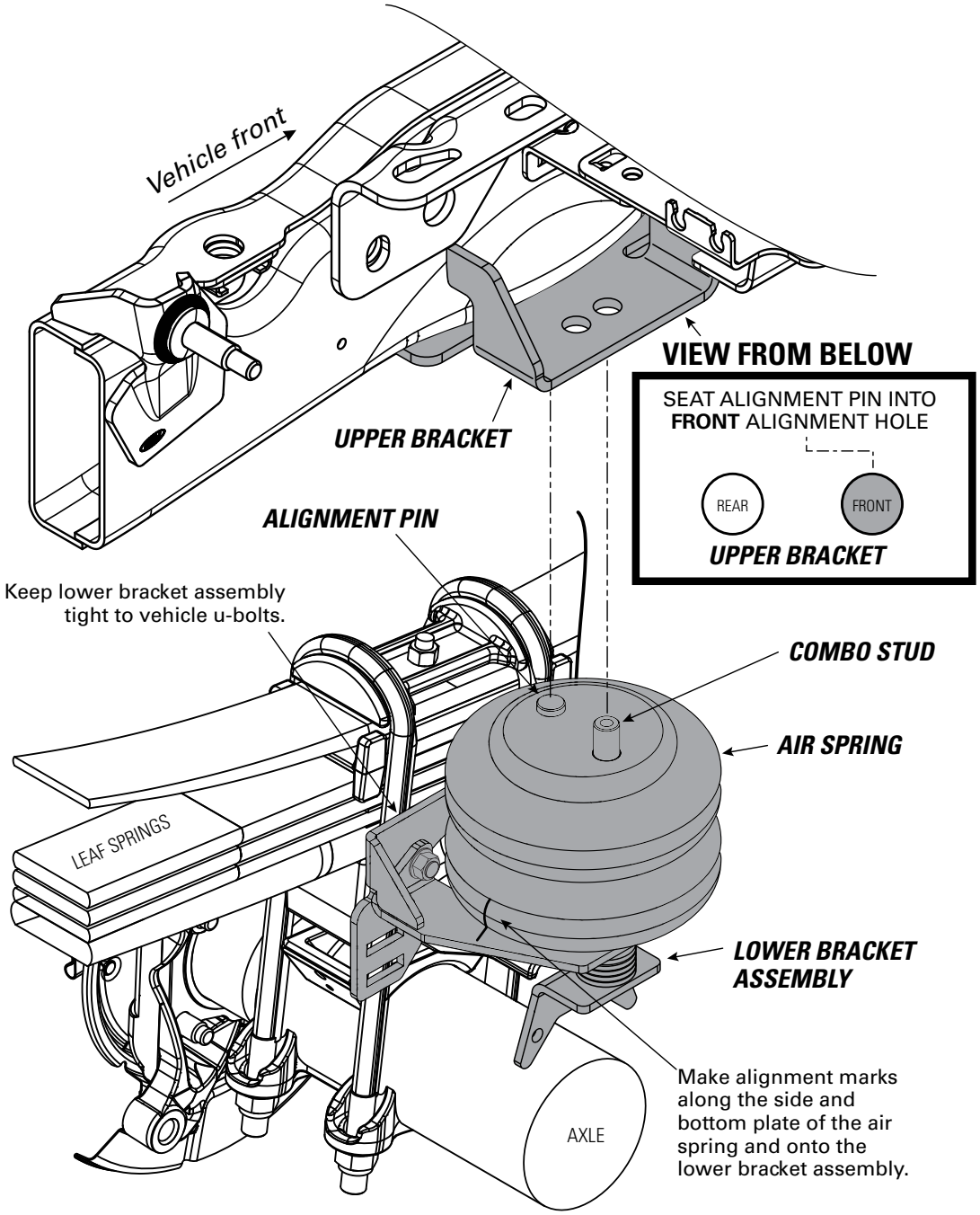

7 DRY FIT LOWER BRACKET ASSEMBLY

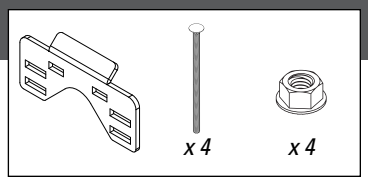

1 Remove air spring and fastener from lower bracket assembly.

2 Install the lower bracket assembly so that it is tight against the vehicle leaf spring stack and axle.

3 **Do not fully tighten at this stage.** You will remove the assembly after the next step.

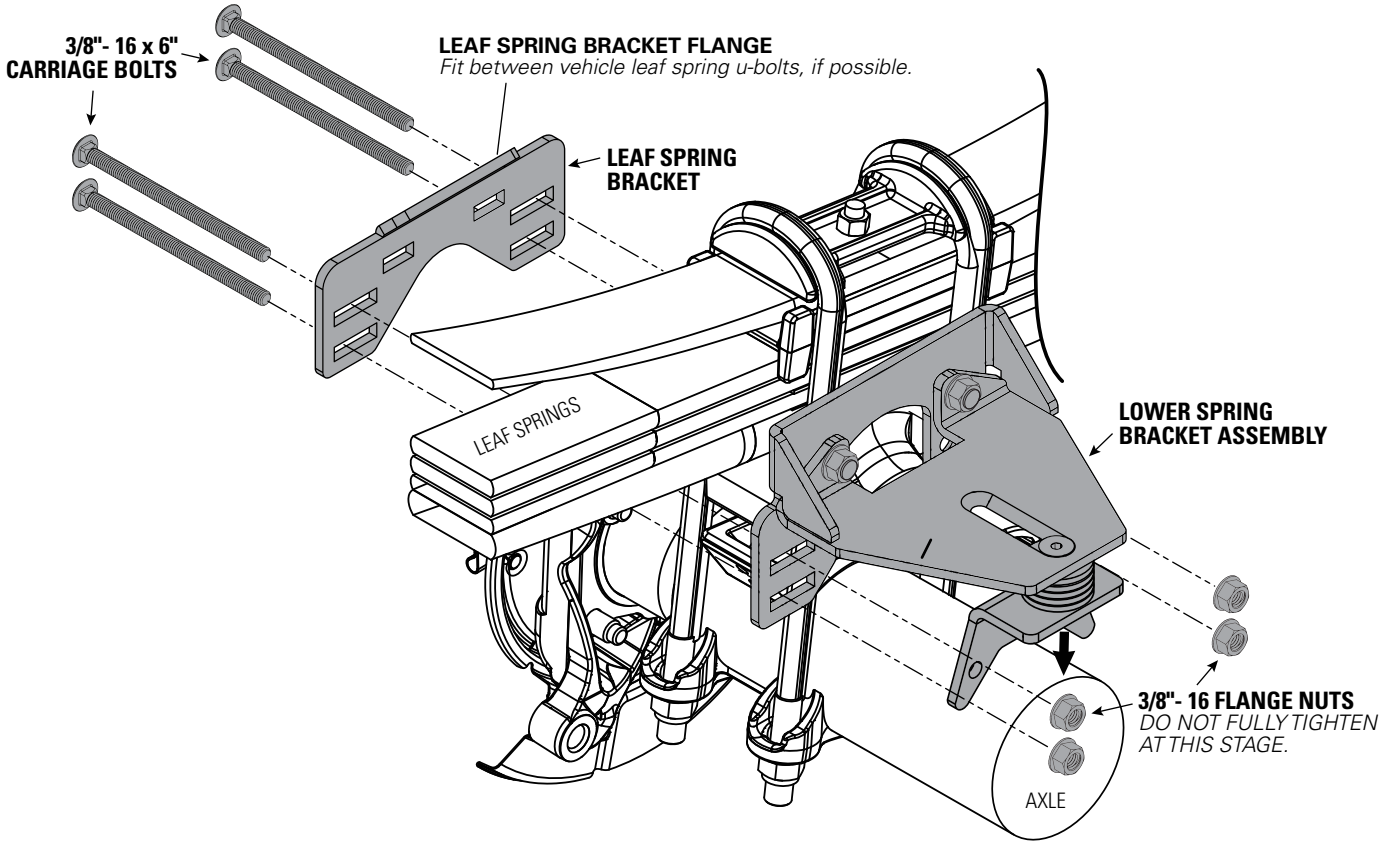

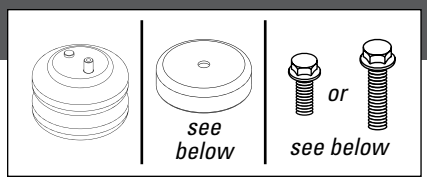

With vehicle unloaded on level ground and supporting its own weight, measure the distance between the bottom of the upper bracket and the top of the lower bracket. Use your measurement to follow the appropriate steps below.

STANDARD INSTALLATION

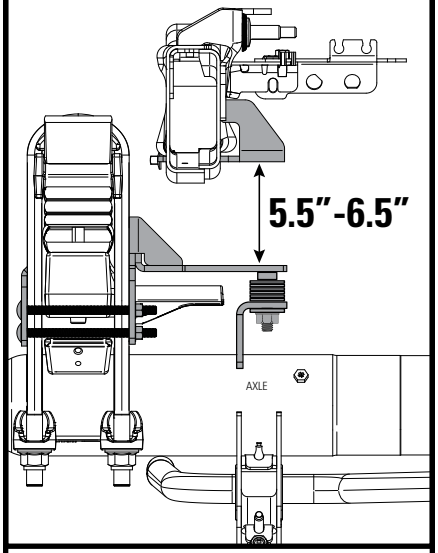

5.5"-6.5"

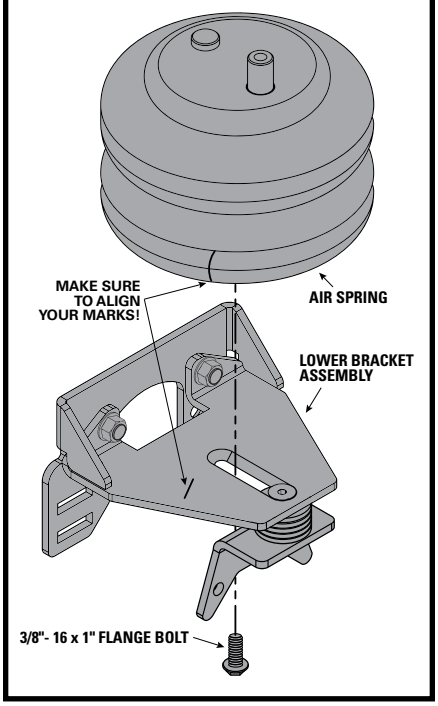

INSTALLATION WITH SPACER

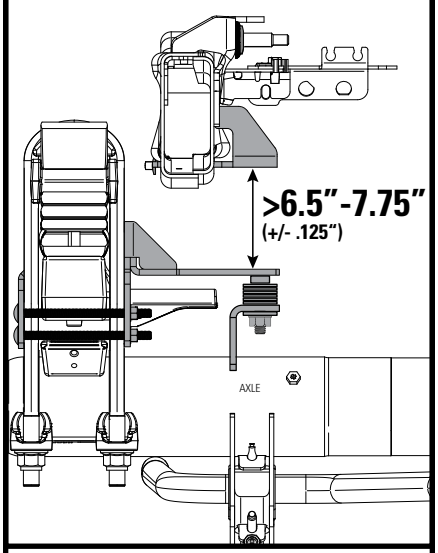

> 6.5"-7.75"

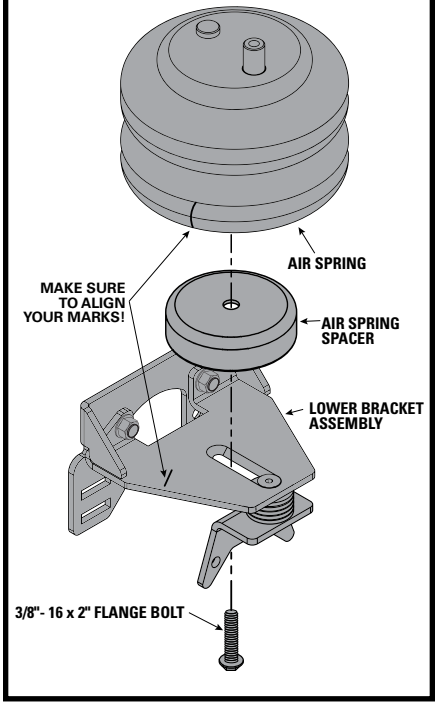

LARGER SPACER REQUIRED

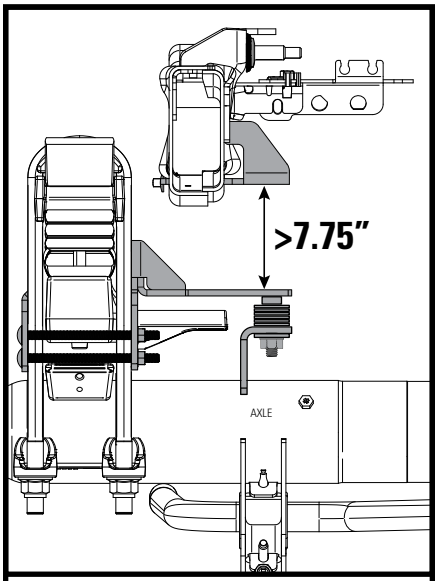

> 7.75"

See Firestone catalog to order correct spacer to achieve the proper 5.5"- 6.5" distance.

YOUR ALIGNMENT MARKS MUST LINE UP BEFORE FULLY-TIGHTENING THE FLANGE BOLT.

9 INSTALL AIR SPRING TO UPPER BRACKET

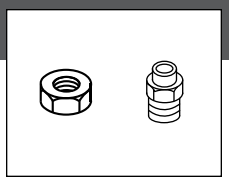

INSTALLING THE RIGHT SIDE? REMEMBER TO INSTALL THE HEAT SHIELD IN STEP 11 FIRST!

1 Install the air spring combo stud into the **front** alignment hole in the upper bracket. Fully-seat the air spring alignment pin into the **front** alignment hole.

2 Fully tighten the top of the air spring to the upper bracket.

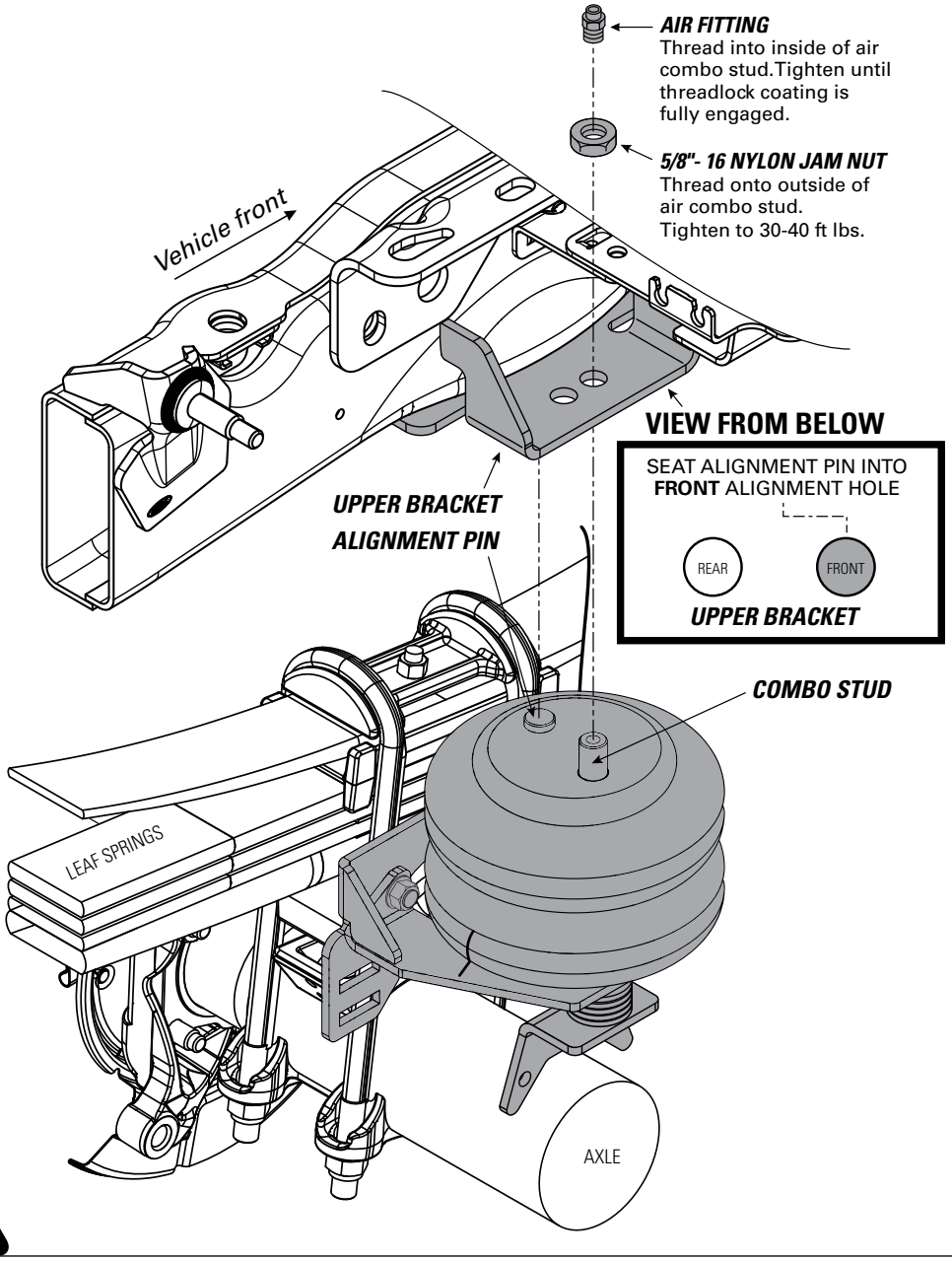

ALIGNMENT PIN ON AIR SPRINGS MUST BE INSTALLED TO FULLY SEAT INTO THE FRONT ALIGNMENT HOLE IN THE UPPER BRACKET. FAILURE TO DO SO WILL CAUSE IT TO BE PUSHED INTO THE BEAD PLATE, CREATING AN AIR LEAK, AND RESULTING IN AN AIR SPRING FAILURE THAT IS **NOT WARRANTABLE. THE ALIGNMENT PIN CANNOT HOLD 2,500 LBS! IT IS USED FOR ALIGNMENT ONLY!**

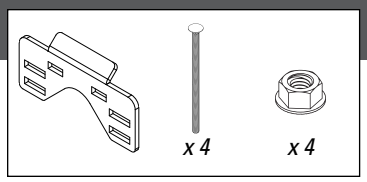

1 Install the lower bracket assembly so that it is tight against the vehicle leaf spring stack and axle.

2 Place the leaf spring bracket on the outboard side of the leaf spring stack. If possible, fit the leaf spring bracket flange between the vehicle leaf spring u-bolts.

3 Install the fasteners as shown. Alternate tightening to evenly draw the lower spring bracket assembly to the vehicle leaf spring u-bolts.

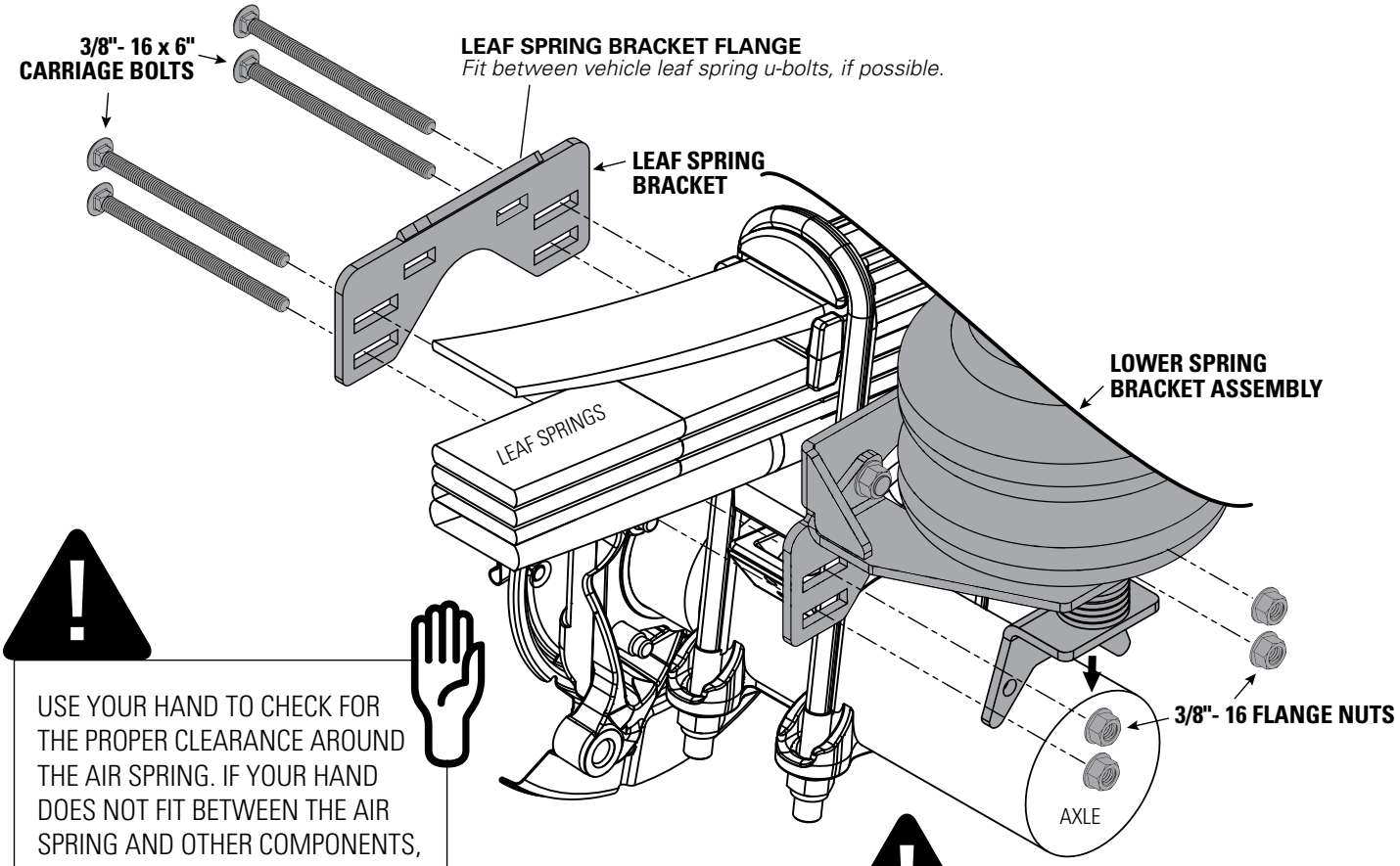

USE YOUR HAND TO CHECK FOR THE PROPER CLEARANCE AROUND THE AIR SPRING. IF YOUR HAND DOES NOT FIT BETWEEN THE AIR SPRING AND OTHER COMPONENTS, IT WILL RUB!

DID YOU TIGHTEN ALL HARDWARE?
COMPLETE THIS BEFORE MOVING TO THE NEXT STEP!

AWESOME! You're done with the left side. The right side is the same, with the addition of the heat shield. See step 11, then complete the steps for the right side installation.

11 INSTALL HEAT SHIELD ON RIGHT SIDE

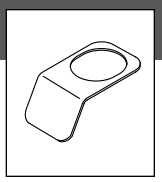

RIGHT SIDE INSTALLATION MUST INCLUDE HEAT SHIELD!

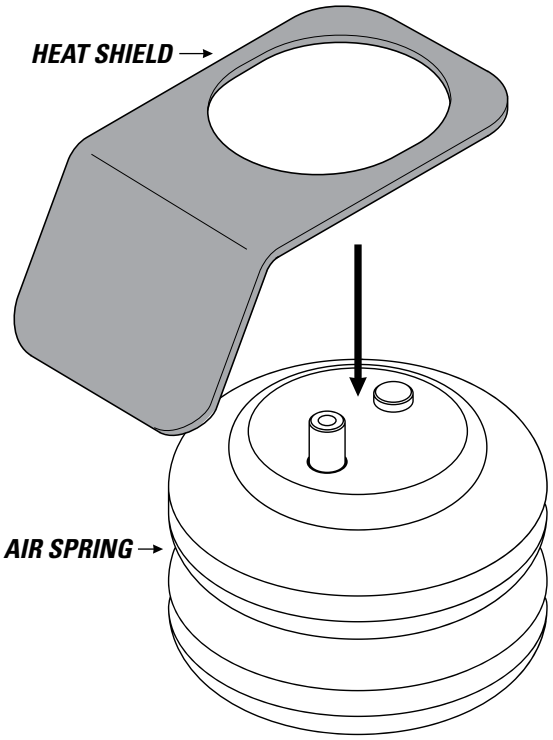

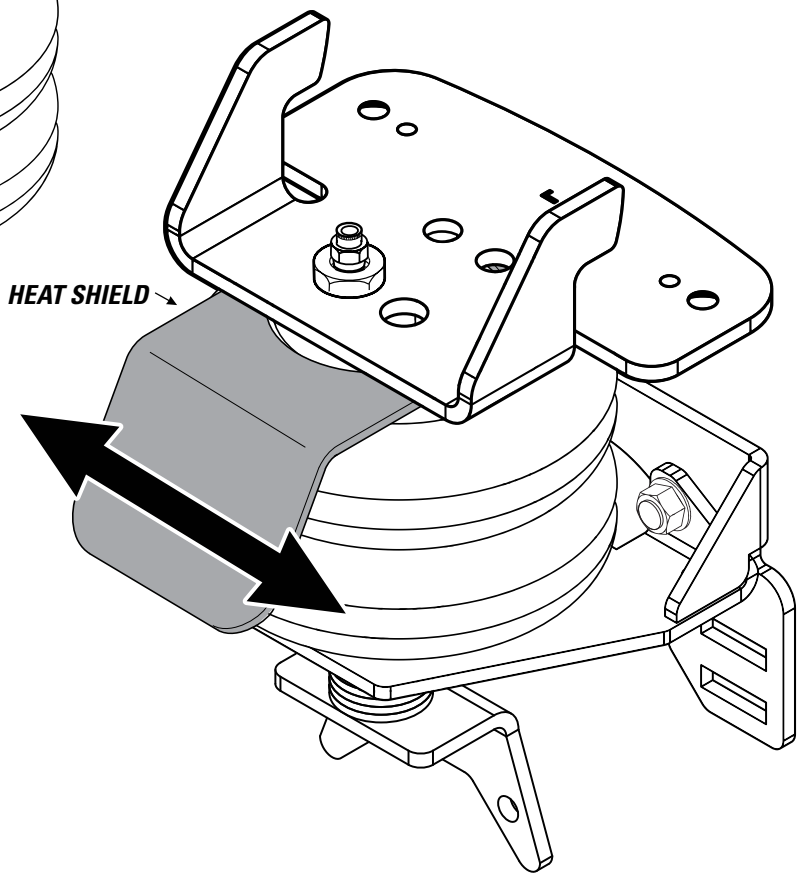

Position heat shield to closest point of exhaust. DO NOT PLACE DIRECTLY ABOVE AXLE.

INSTALL INFLATION VALVES 12

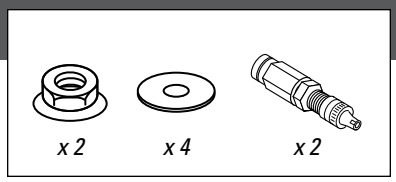

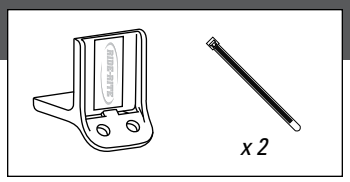

IF USING THE OPTIONAL NO-DRILL INFLATION VALVE BRACKET, CHOOSE OPTION 1. IF DRILLING, CHOOSE OPTION 2. **INFLATION VALVES MUST BE ACCESSIBLE BY AN AIR CHUCK.**

1 Secure the air inflation valve bracket to a protected, secure location.

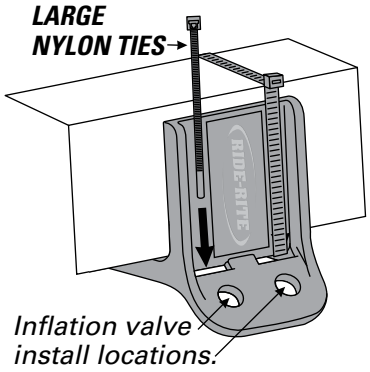

2 Select a protected location to install the inflation valves, such as the bumper or the body of the vehicle.

Drill two 5/16" holes for inflation valve install locations.

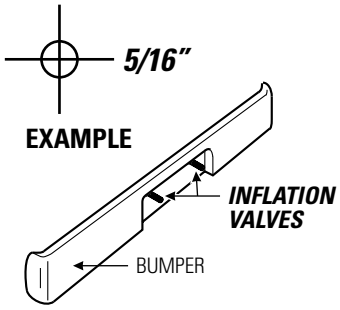

INFLATION VALVE ASSEMBLY

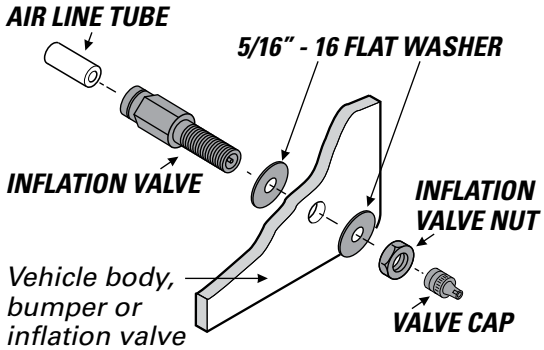

CUT THE AIR LINE TUBE INTO TWO EQUAL LENGTHS 13

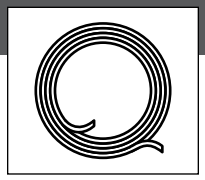

1 Match air line tube ends.

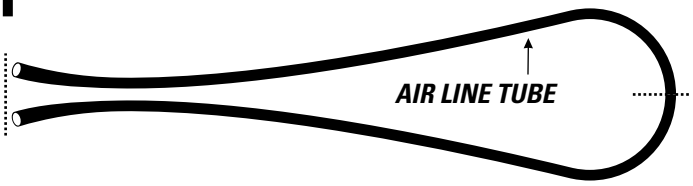

2 Find center of air line tube, make a square cut with tube cutter or sharp utility knife.

DO	DON'T
Make sure the cut is as square as possible. Use a tube cutter or sharp utility knife.	Fold or kink the air line tube. Cut the air line tube at an angle. Use pliers, scissors, snips, Saws, or side cutters.

PROPER AND IMPROPER CUTS IN THE AIR LINE TUBE

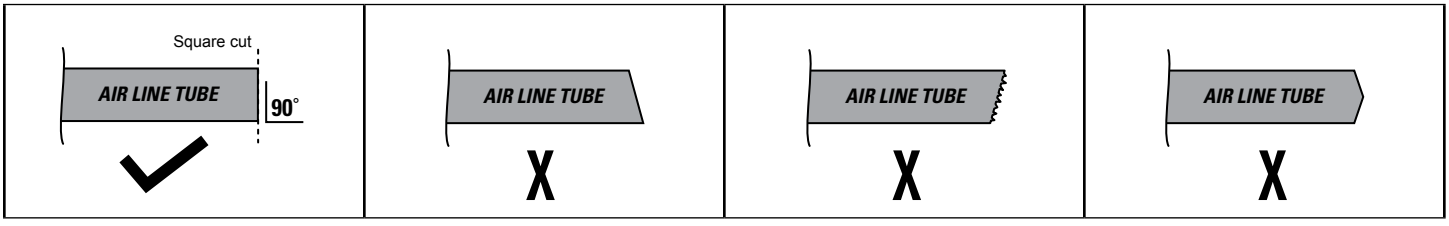

14 ROUTE AND SECURE AIR LINE TUBES

Air line tube routes will vary, depending on your truck, and requires you to choose the best path from the air springs to the inflation valves. Use the instructions below to help you choose.

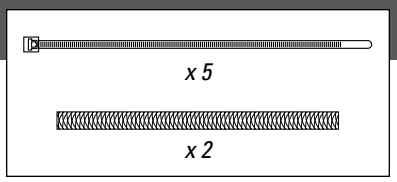

DO	DON'T
Select routes protected from heat, Debris, and sharp edges. Use thermal shields near heat sources. Use nylon ties to secure the air line tube.	Bend or sharply curve air line tubes. Leave air line tube exposed to sharp edges. Use unnecessary lengths of air line tube. Route air line tube near moving parts. Let air line tube hang unsecured from vehicle. Scar air line tube while routing.

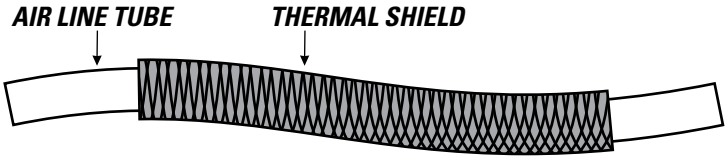

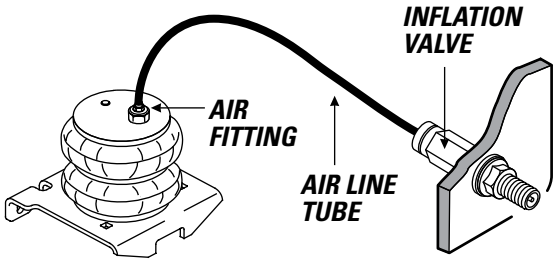

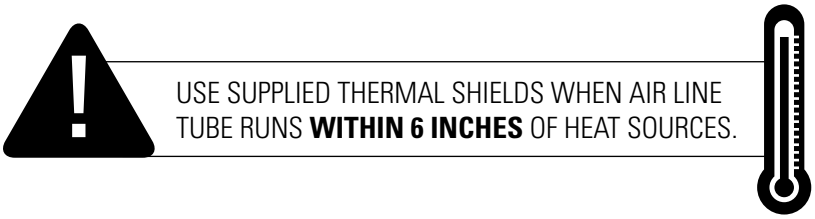

USE SUPPLIED THERMAL SHIELDS WHEN AIR LINE TUBE RUNS **WITHIN 6 INCHES** OF HEAT SOURCES.

15 INSTALLING AIR LINE TUBE INTO AIR FITTINGS AND INFLATION VALVE

1 Insert end of air line tube into air fitting.

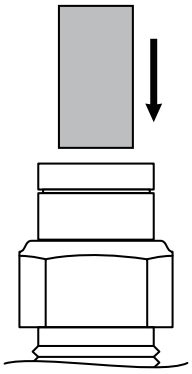

2 Push air line tube into air fitting as far as possible.

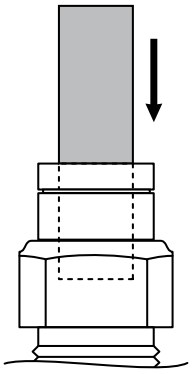

3 Gently pull on the air line tube to check for a secure fit.

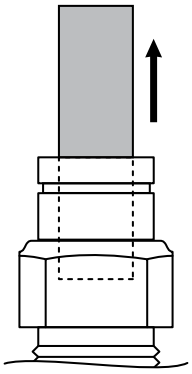

AIR LINE REMOVAL

To remove, push down collar and gently pull air line tube away.

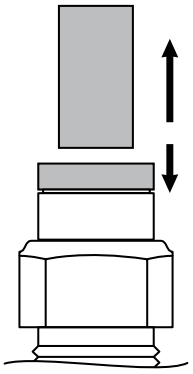

Removal Tip: Use a 1/4", 5/16", or 6mm open-ended wrench to push the collar down.

1 Place an air chuck onto the inflation valve and fill the system to **70 PSI**.

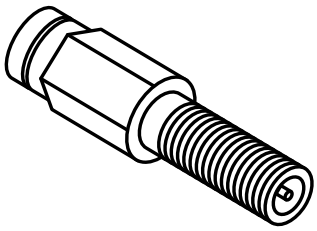



AIR SPRINGS INFLATE QUICKLY. CHECK AIR PRESSURE WHILE INFLATING.

2 Spray fittings with soap and water mixture or glass cleaner.



3 Observe bubbles.

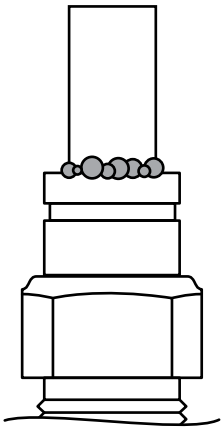

SMALL SOAP BUBBLES THAT DO NOT EXPAND

✓

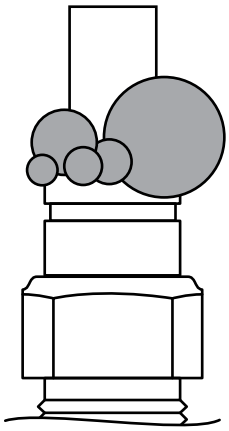

SOAP BUBBLES THAT EXPAND

X

NO LEAKS?

Congratulations! Continue to step 18 to finish installation. Review the Operating Instructions.

LEAK?

Bummer. Continue to step 17 to fix the leak.

17 FIXING AN AIR LEAK

1 Press the air valve on end of inflation valve to release all air pressure.

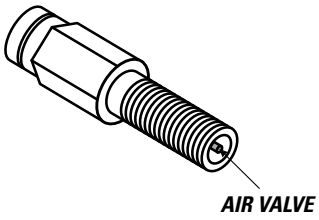

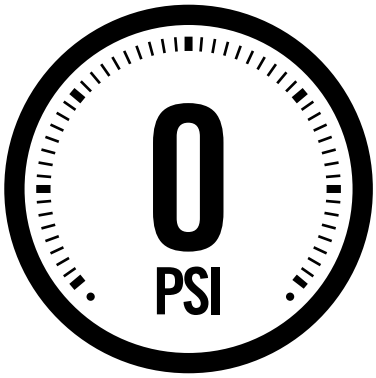



EXHAUST ALL AIR FROM THE SYSTEM PRIOR TO RELEASING AIR LINE TUBES FROM AIR FITTINGS.

LEAK AT AIR LINE TUBE AND AIR FITTING

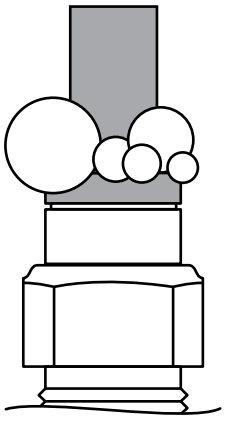

Release air line tube (see page 15). Review proper cuts and procedures in step 13. Repeat steps 15 and 16.

LEAK AT BASE OF AIR FITTING ON AIR SPRING

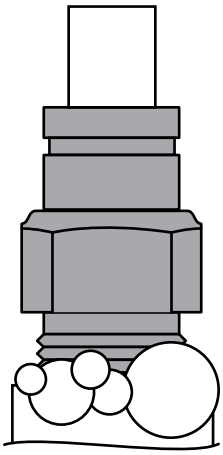

Tighten air fitting one turn or until leak stops.

LEAK OUT OF THE VALVE CORE ON INFLATION VALVE

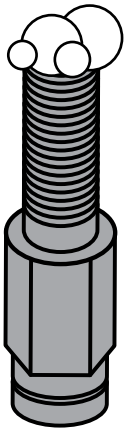

Tighten valve core with valve core wrench on inflation valve cap.

STILL HAVE A LEAK?

Refer to the Troubleshooting section of the Instruction Manual.

SAFELY RETURN VEHICLE TO OPERATIVE STATE

If you removed any wheels during installation, install the wheels and torque the lug nuts to the manufacturer's specifications.

Safely remove any jack stands and wheel chocks used during installation.

Re-attach the negative battery cable.

DOUBLE-CHECK AIR SPRING CLEARANCE

Check the air springs once again for the proper 1/2" minimum clearance. Perform clearance check again when vehicle is under load.

VEHICLE GVWR

NEVER exceed the maximum load recommended by the vehicle manufacturer (GVWR). The GVWR can be found in your vehicle's owner's manual or on the data plate on the driver's side door. Consult your local dealership for additional GVWR specifications.

READ AND UNDERSTAND THE OPERATING INSTRUCTIONS

The Ride-Rite system can improve handling and comfort. Take the time to learn how to properly use and maintain your investment by reading the Operating Instructions.

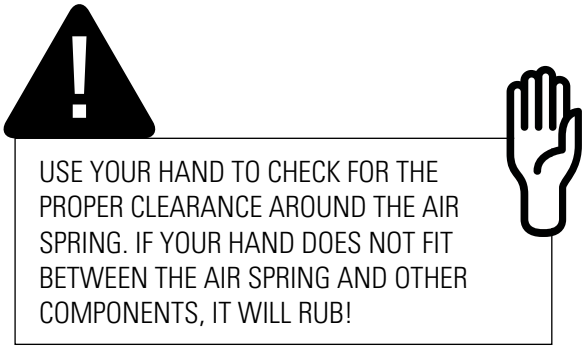

USE YOUR HAND TO CHECK FOR THE PROPER CLEARANCE AROUND THE AIR SPRING. IF YOUR HAND DOES NOT FIT BETWEEN THE AIR SPRING AND OTHER COMPONENTS, IT WILL RUB!

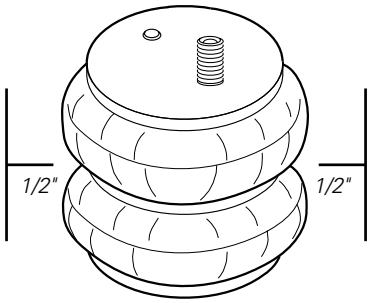

! IMPORTANT

A MINIMUM OF 5 PSI MUST BE MAINTAINED IN THE AIR SPRINGS AT ALL TIMES

Too much air pressure in the air springs will result in a firmer ride, while too little air pressure will allow the air springs to bottom out over rough conditions, and will not provide the improvement in handling that is possible.

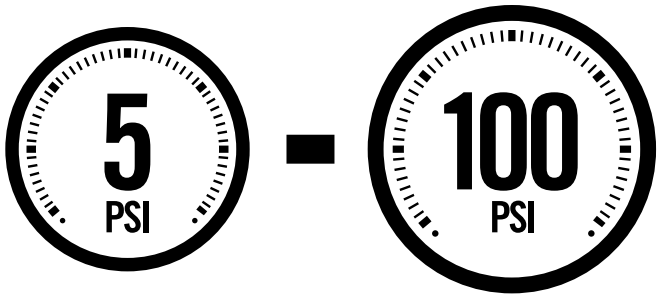

MINIMUM PRESSURE *MAXIMUM PRESSURE (LOADED)*

RIDE-RITE™

AIR HELPER SPRINGS

riderite.com

BEFORE YOU DRIVE, CONFIRM THE FOLLOWING:

- ☐ Do you have a minimum of 5PSI in your air springs?
- ☐ Are your air springs standing 5.5" - 6.5" tall?
- ☐ Are your air springs properly aligned, left-to-right and front-to-back?
- ☐ Are your nuts and bolts tight?
- ☐ Put your paper work back into the sleeve and keep it in your glove compartment for future reference.
- ☐ You've been bagged...and now your suspension is Airide™ equipped! Show it off with the supplied decal!

5.5" - 6.5"

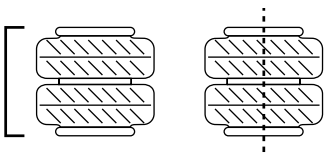

NEED INSTALLATION HELP?

Email us at **rrtech@fsip.com**. Please include photos to help us better diagnose and understand any problems you may be experiencing.

Firestone

Firestone Industrial Products

CONNECT WITH US FirestoneIP Firestone Ride-Rite