2877

AIRIDE

firestoneairide.com

INSTALLATION INSTRUCTIONS

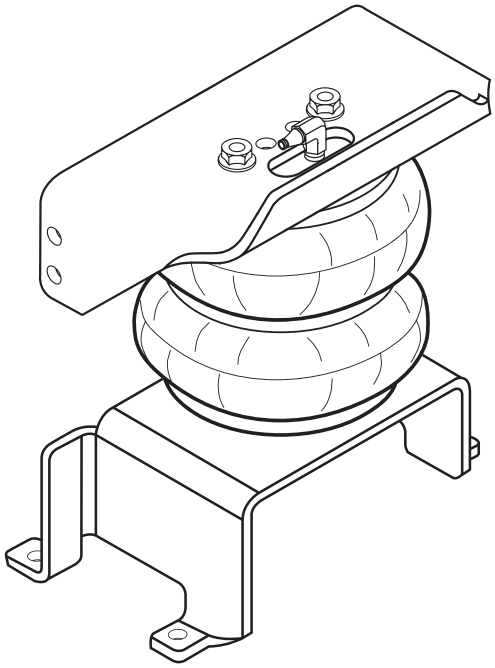

SECTION 1 - AIR SPRING

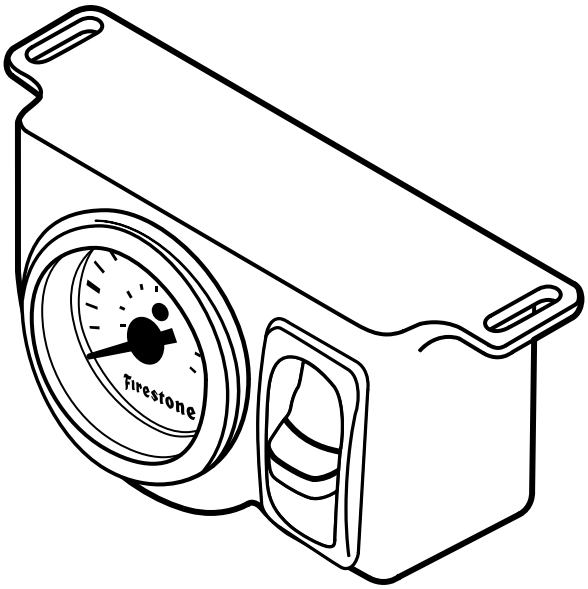

SECTION 2 - AIR ACCESSORY

© 2025 Firestone Industrial Products Company, LLC

2582

RIDE-RITE™

AIR HELPER SPRINGS

riderite.com

INSTALLATION INSTRUCTIONS

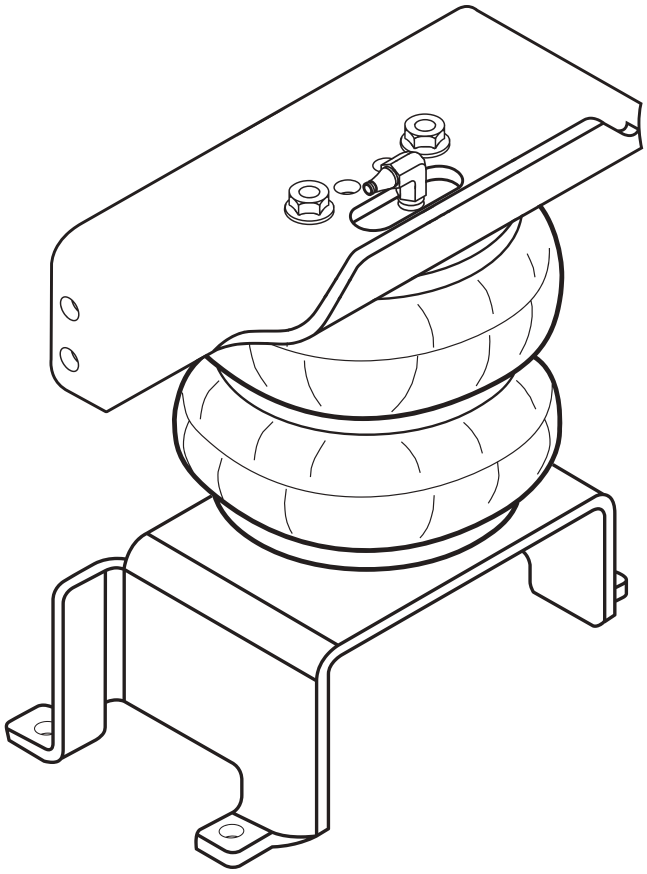

Firestone

World's Number 1 Air Spring.

FIRESTONE INDUSTRIAL PRODUCTS COMPANY

! IMPORTANT

PLEASE DON'T HURT YOURSELF, YOUR KIT OR YOUR VEHICLE. TAKE A MINUTE TO READ THIS IMPORTANT INFORMATION.

DO NOT INSTALL IF THE TRUCK HAS BEEN LIFTED AND THE STOCK JOUNCE BUMPER SPACERS ARE NOT ON THE VEHICLE. *This kit is to be used on a* ***pickup truck only****, and* ***DOES NOT INCREASE YOUR VEHICLE'S MAXIMUM LOAD.***

SAFE INSTALLATION

Please take all safety precautions during installation. A hydraulic jack can fail, and if that happens, you can be seriously hurt, or worse, if you are relying on it to hold up the vehicle. If you use a hydraulic jack, secure jack stands in the appropriate locations and chock any tires still touching the ground.

Wear safety glasses or goggles. Your eyes may be lower than some parts and pieces, and you don't want to lose an eye.

Remove the possibility of any electrical issues by disconnecting the negative battery cable.

KIT CLEARANCE

There must be a minimum of 1/2" clearance around all installed components when the Air Springs are inflated and under a load. The Air Springs must flex and expand during operation, so the clearance keeps the kit from rubbing against parts of the vehicle.

VEHICLE GVWR

NEVER exceed the maximum load recommended by the vehicle manufacturer (GVWR). The GVWR can be found in your vehicle's owner's manual or on the data plate on the driver's side door.

INFLATING THE AIR SPRINGS

When inflating Air Springs, add air pressure in small quantities, checking air pressure frequently. The Air Springs have much less air volume than a tire, so they inflate much more quickly.

PRESSURE TO LOAD

The Air Springs will support approximately 50 lbs. of load for each PSI of inflation pressure (per pair). For example, 50 PSI of inflation pressure will support a load of 2500 lbs. per pair of Air Springs.

APPROPRIATE AIR PRESSURE

For best ride, use only enough air pressure in the Air Springs to level the vehicle when viewed from the side (front to rear). This will vary, depending on the load, location of the load, condition of the existing suspension, and personal preference.

OPTIONAL T-FITTING

This kit includes Inflation Valves and Air Line Tube for each Air Spring, allowing you to compensate for unbalanced loads. If you prefer a single Inflation Valve system to provide equal pressure to both Air Springs, your dealer can supply the optional "T" fitting (Part # 3025 or WRI-760-3461 retail pack).

ONCE INSTALLED SUCCESSFULLY, FOLLOW THESE PRESSURE REQUIREMENTS FOR THE AIR SPRINGS:

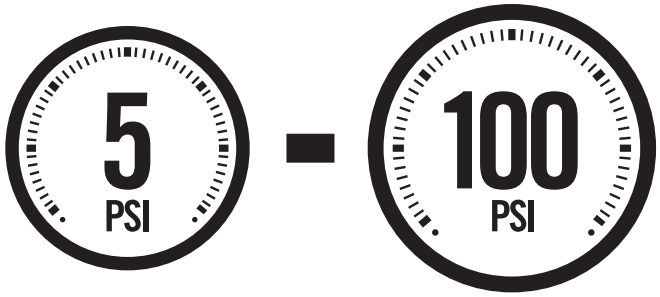

MINIMUM PRESSURE ***MAXIMUM PRESSURE (LOADED)***

PARTS

Compare the parts below to your kit. Ensure you have all pieces, and organize them for an easier installation.

MAIN KIT CONTENTS

PART # 6781		x 2 AIR SPRING	PART # 5702	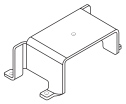	x 1 LEFT LOWER BRACKET	PART # 3410	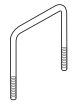	x 4 BAIL CLAMP
PART # 5806	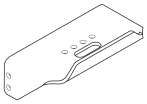	x 2 AIR SPRING UPPER BRACKET	PART # 5703	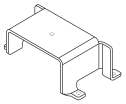	x 1 RIGHT LOWER BRACKET	PART # 5336	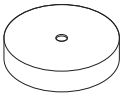	x 2 AIR SPRING SPACER *(see page 6 for important details)*
PART # 5804	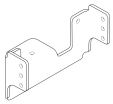	x 1 LEFT FRAME BRACKET	PART # 5660		x 4 FRAME HOLE BRACKET	PART # 9414		x 1 AIR LINE TUBE (18 FEET)
PART # 5805	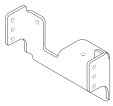	x 1 RIGHT FRAME BRACKET						

A24-760-7560 INFLATION VALVE BRACKET KIT

PART # 9483		x 1 NO-DRILL INFLATION VALVE BRACKET	PART # 9488		x 2 LARGE NYLON TIE

A21-760-2582 HARDWARE PACK

PT # 3338		x 12 3/8" - 16 x 1" HEX HEAD BOLT	PT # 3031		x 2 1/4" ELBOW AIR FITTING	PT # 3150		x 2 3/8" - 16 x 2" FLANGE BOLT *(see page 6)*
PT # 3033		x 4 5/16" FLAT WASHER	PT # 3069		x 2 3/8" - 16 x 3/4" FLANGE BOLT	PT # 9036		x 6 RED NYLON TIE
PT # 3067		x 20 3/8" - 16 FLANGE LOCK NUT	PT # 3032	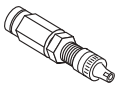	x 2 INFLATION VALVE AND VALVE CAP ASSEMBLY	PT # 0899		x 2 THERMAL SLEEVE

CONTENTS AND OVERVIEW

PAGE 4 **REMOVE EXISTING JOUNCE BUMPER**

PAGE 5 **INSTALL UPPER BRACKET TO AIR SPRING**

PAGE 6 **INSTALL LOWER BRACKET**

PAGE 7 **INSTALL FRAME BRACKET**

PAGE 8 **INSTALL AIR SPRING ASSEMBLY TO FRAME BRACKET**

PAGE 9 **SECURE LOWER BRACKET**

PAGE 10 **AIR LINE TUBE & INFLATION VALVE INSTALLATION**

PAGE 11 **INSTALL & ROUTE AIR LINE TUBE**

PAGE 12 **CHECKING THE SYSTEM**

PAGE 13 **FIXING AN AIR LEAK**

PAGE 14 **FINISHING THE INSTALLATION**

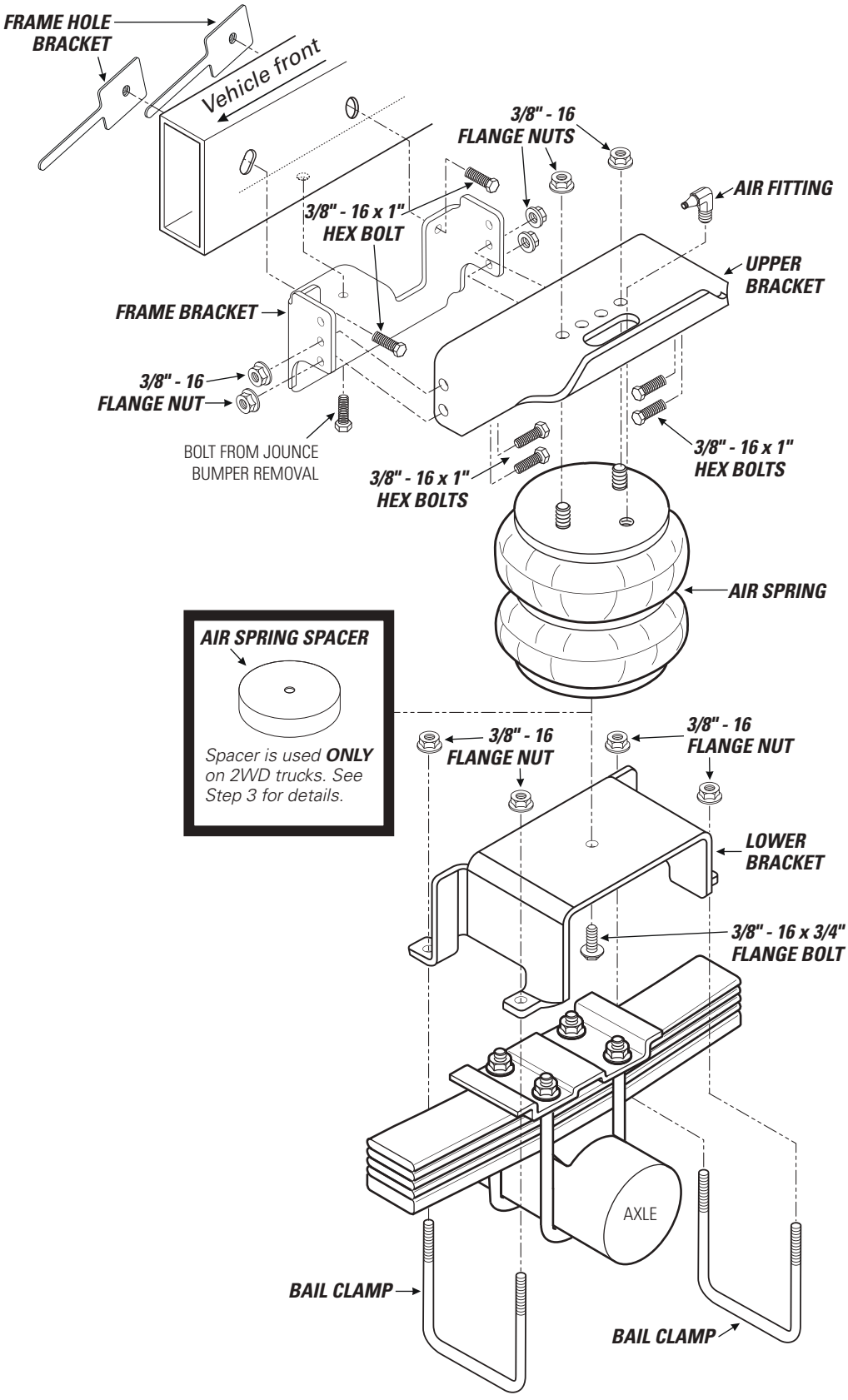

1 Remove the existing Jounce Bumper. KEEP THE BOLT FROM THE JOUNCE BUMPER. IT WILL BE USED LATER IN THE INSTALLATION.

START THE INSTALLATION ON THE LEFT SIDE OF THE VEHICLE WHEN FACING FORWARD.

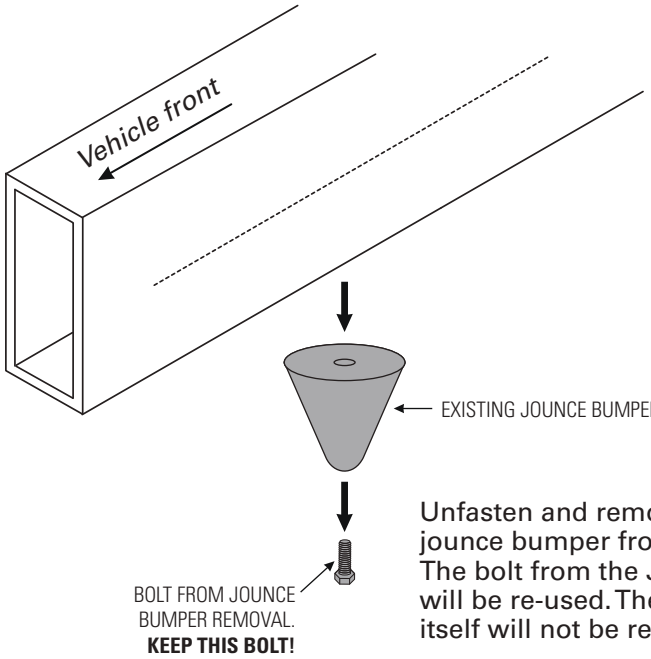

Unfasten and remove existing jounce bumper from the vehicle. The bolt from the Jounce Bumper will be re-used. The Jounce Bumper itself will not be re-used.

2 INSTALL UPPER BRACKET TO AIR SPRING

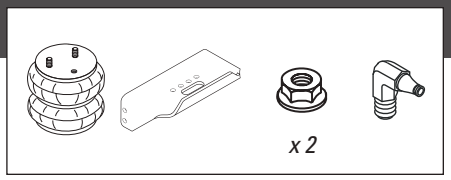

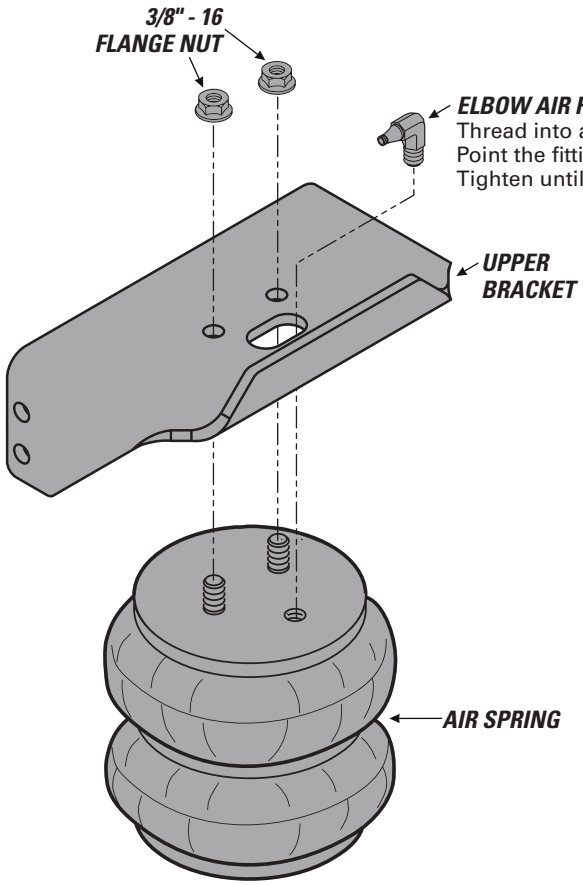

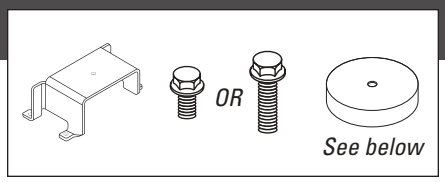
OR
See below

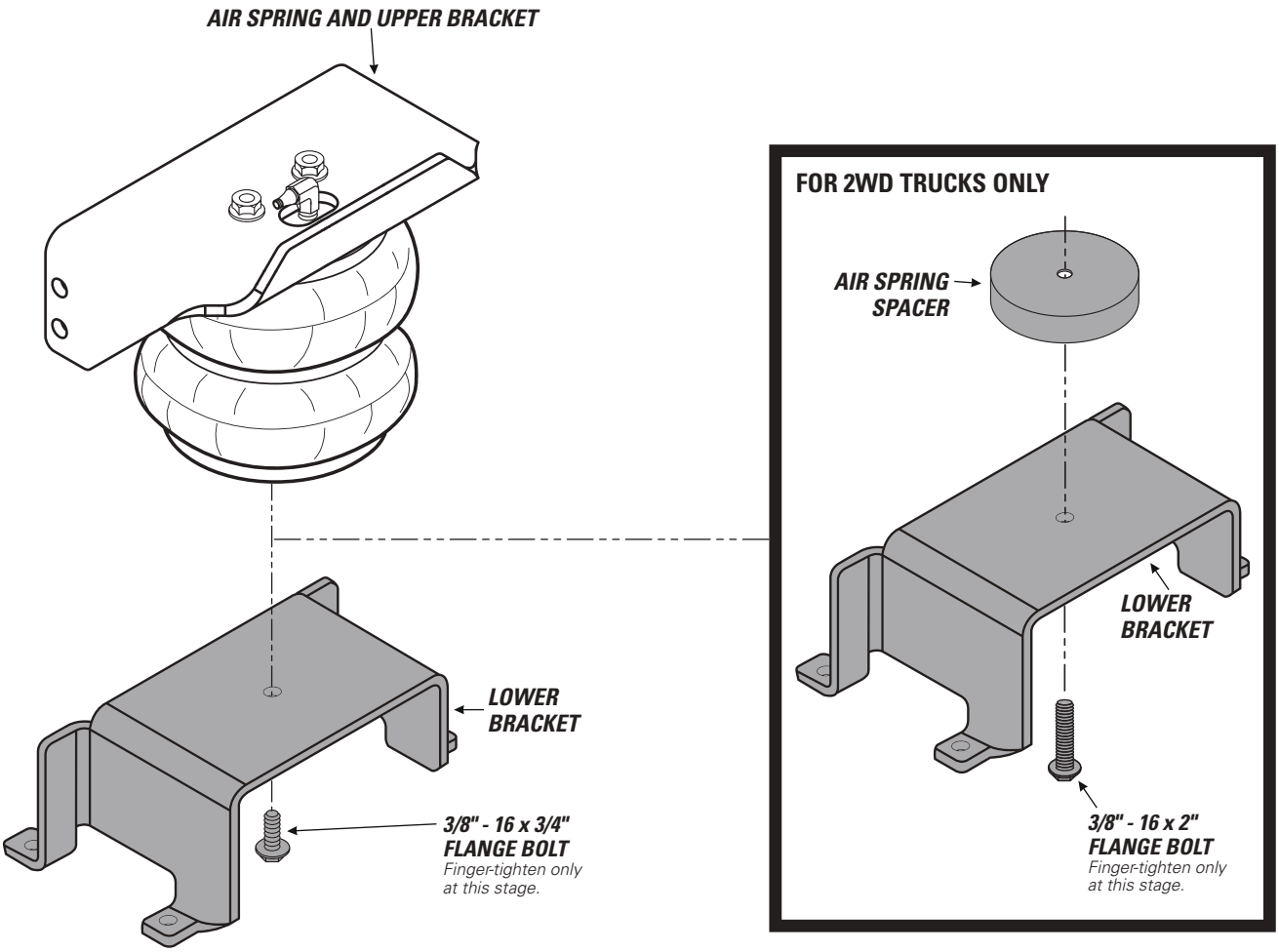
AIR SPRING AND UPPER BRACKET
LOWER BRACKET
3/8" - 16 x 3/4" FLANGE BOLT
Finger-tighten only at this stage.
FOR 2WD TRUCKS ONLY
AIR SPRING SPACER
LOWER BRACKET
3/8" - 16 x 2" FLANGE BOLT
Finger-tighten only at this stage.

4 INSTALL FRAME BRACKET

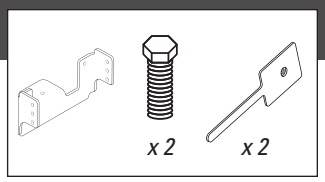

1 Place the Frame Bracket in position and install the bolt from the jounce bumper removal in Step 1.

2 Follow guidelines below to bend tabs of the Frame Hole Brackets. Start with a 45-degree angle and adjust as necessary.

3 Insert the Frame Hole Brackets into the hole on the inside of the frame, and fasten the Frame Bracket with the supplied fasteners. DO NOT OVER-TIGHTEN.

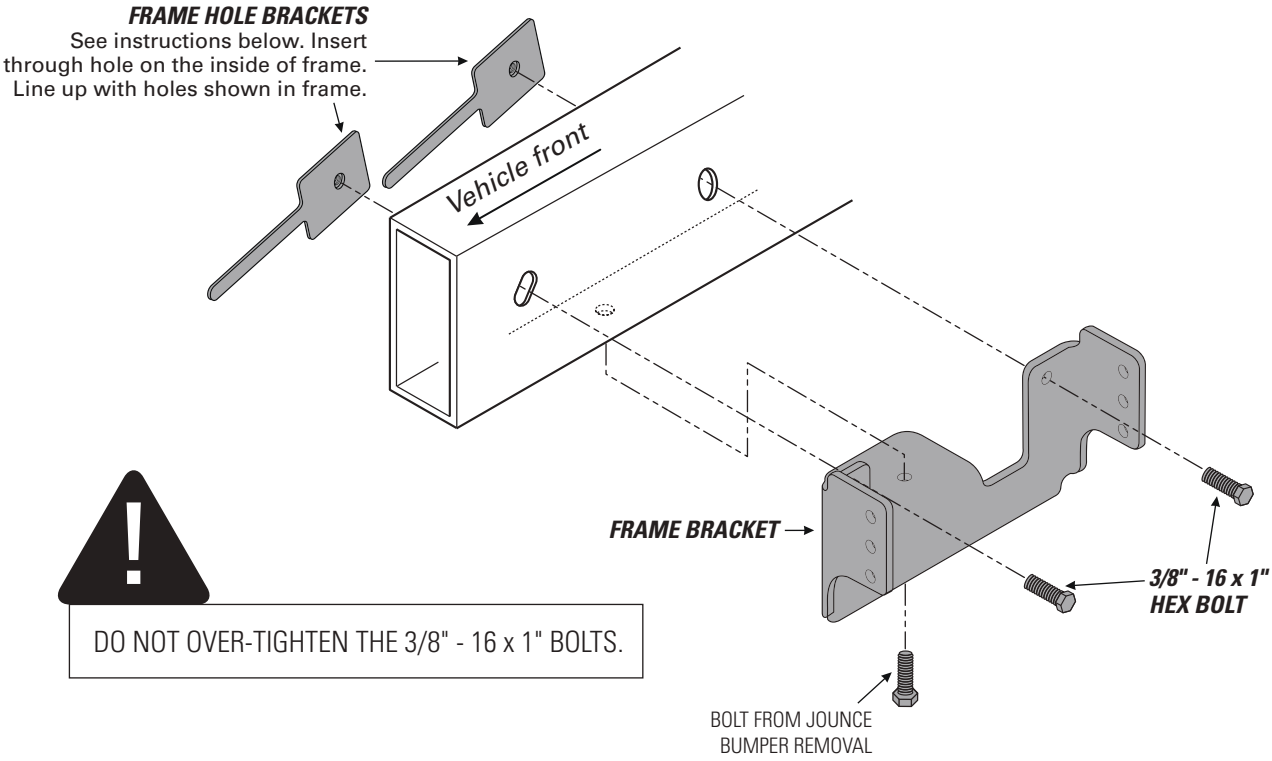

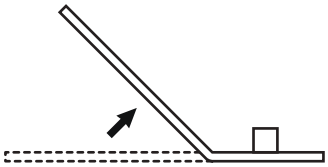

FRAME HOLE BRACKETS
Bend frame bracket at a 45 degree angle. Adjust angle as needed to catch lip of hole in frame.

FRAME HOLE BRACKETS
Frame Hole Brackets are designed to catch the lip of the hole in the frame as the 3/8" - 16 x 1" Hex Bolts are tightened.

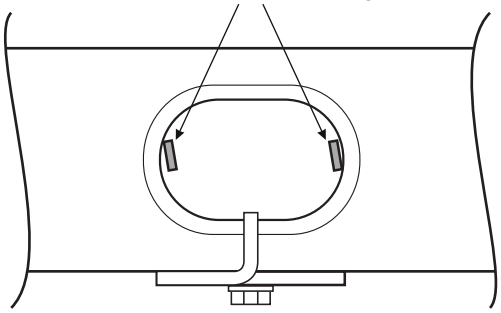

VIEW FROM INSIDE FRAME

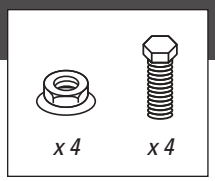

1 Fit Air Spring Assembly into place against the Frame Bracket, as shown.

2 Use the lower two holes in the Frame Bracket for installation.

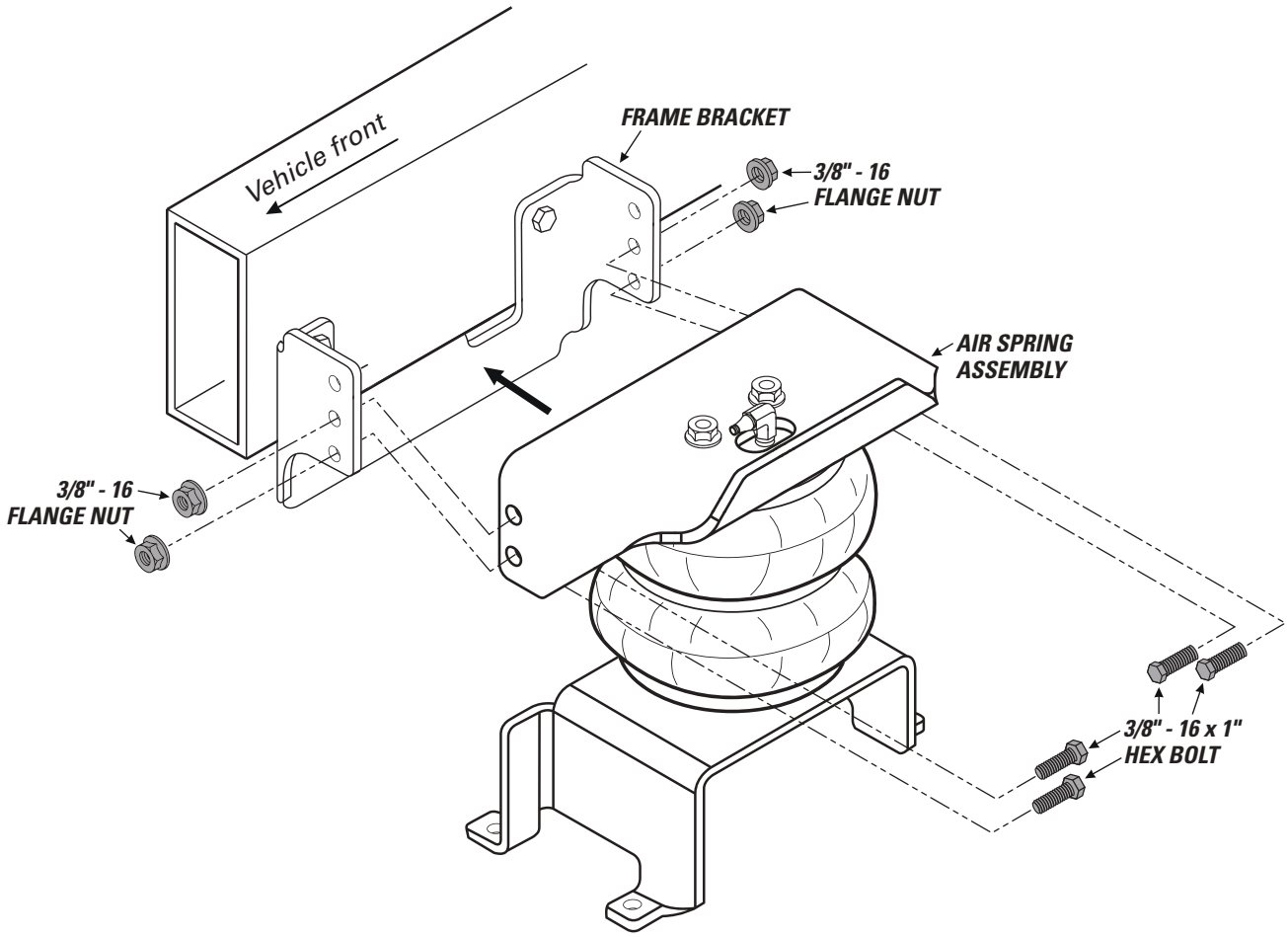

6 SECURE LOWER BRACKET

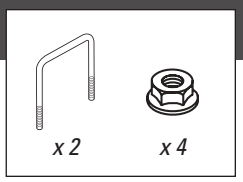

1 Install Bail Clamps to Lower Bracket as shown.

2 **Fully tighten the 3/8" - 16 Flange Bolt to the Air Spring.**

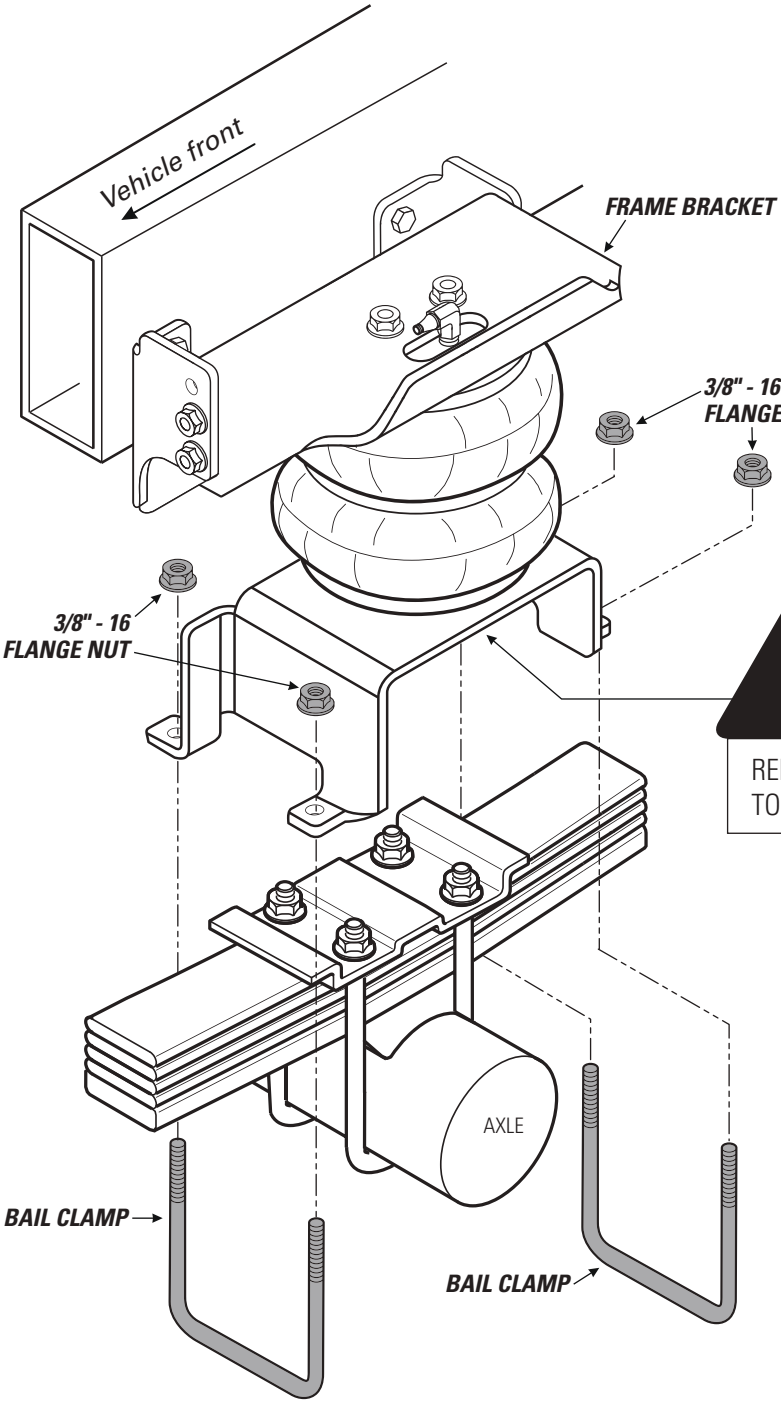

USE YOUR HAND TO CHECK FOR THE PROPER CLEARANCE AROUND THE AIR SPRING. IF YOUR HAND DOES NOT FIT BETWEEN THE AIR SPRING AND OTHER COMPONENTS, IT WILL RUB!

REMEMBER TO FULLY TIGHTEN THE BOLT TO THE BOTTOM OF THE AIR SPRING.

AWESOME! You're done with the left side. Go back to Step 1 and repeat the steps for the right side installation.

INSTALL INFLATION VALVES 7

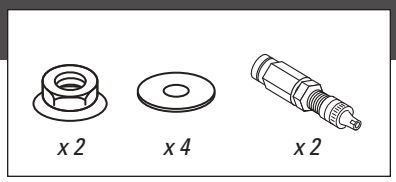

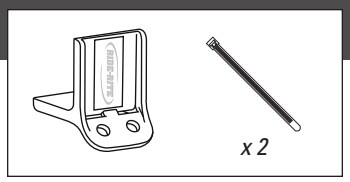

IF USING THE OPTIONAL NO-DRILL INFLATION VALVE BRACKET, CHOOSE OPTION 1. IF DRILLING, CHOOSE OPTION 2. **INFLATION VALVES MUST BE ACCESSIBLE BY AN AIR CHUCK.**

1 Secure the Air Inflation Valve Bracket to a protected, secure location. PROCEED TO STEP 3.

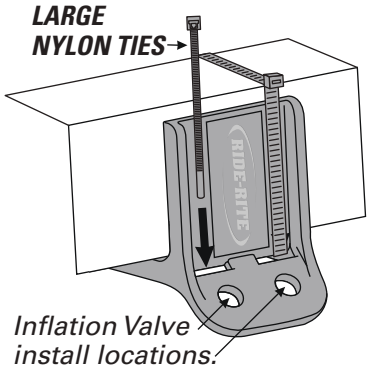

2 Select a protected location to install the Inflation Valves, such as the bumper or the body of the vehicle.

Drill two 5/16" holes for Inflation Valve install locations.

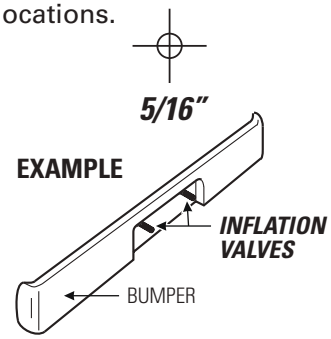

3 Install Inflation Valve assembly as shown.

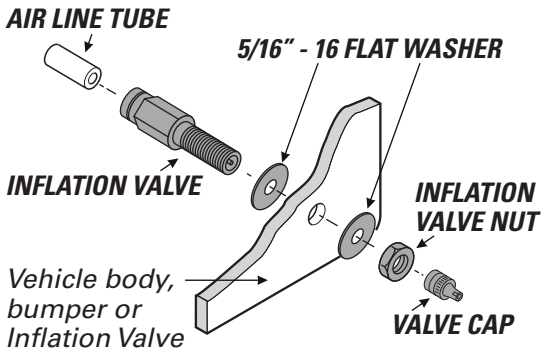

CUT THE AIR LINE TUBE INTO TWO EQUAL LENGTHS 8

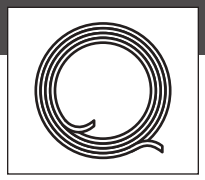

1 Match Air Line Tube ends.

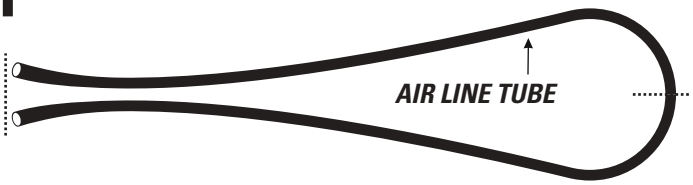

2 Find center of Air Line Tube, make a square cut with tube cutter or sharp utility knife.

DO	DON'T
Make sure the cut is as square as possible. Use a tube cutter or sharp utility knife.	Fold or kink the Air Line Tube. Cut the Air Line Tube at an angle. Use pliers, scissors, snips, saws, or side cutters.

PROPER AND IMPROPER CUTS IN THE AIR LINE TUBE

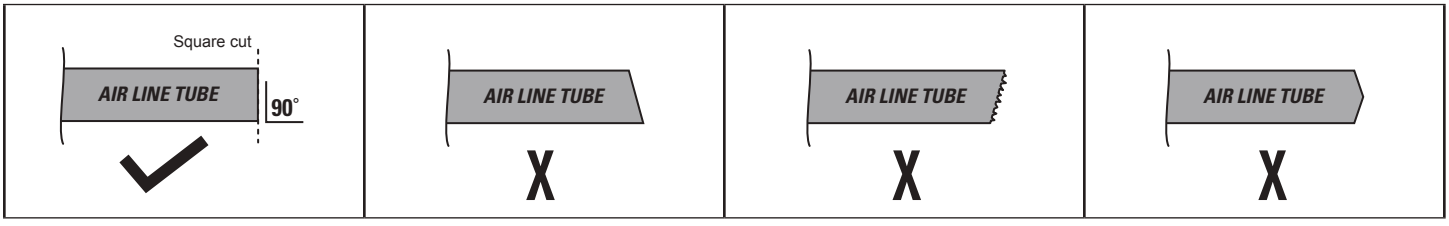

9 INSTALLING AIR LINE TUBE INTO AIR FITTINGS AND INFLATION VALVE

1 Insert end of Air Line Tube into Air Fitting.

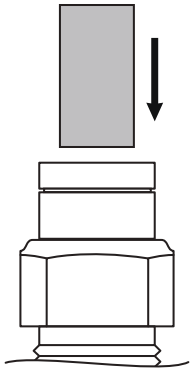

2 Push Air Line Tube into Air Fitting as far as possible.

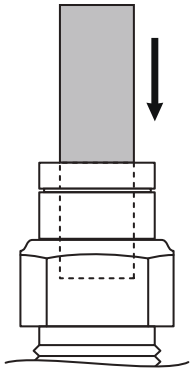

3 Gently pull on the Air Line Tube to check for a secure fit.

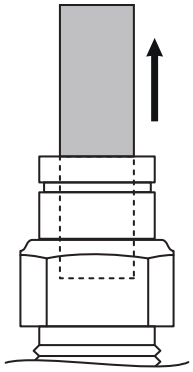

4 To remove, push down collar and gently pull Air Line Tube away.

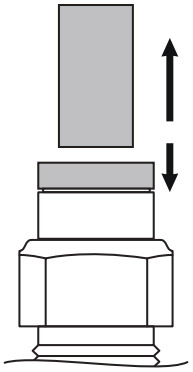

Removal Tip: Use a 1/4", 5/16", or 6mm open-ended wrench to push the collar down.

10 ROUTE AND SECURE AIR LINE TUBES

Air Line Tube routes will vary, depending on your truck, and requires you to choose the best path from the Air Springs to the Inflation Valves. Use the instructions below to help you choose.

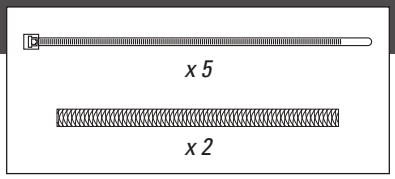

DO	DON'T
Select routes protected from heat, debris, and sharp edges. Use Thermal Shields near heat sources. Use Nylon Ties to secure the Air Line Tube.	Bend or sharply curve Air Line Tubes. Leave Air Line Tube exposed to sharp edges. Use unnecessary lengths of Air Line Tube. Route Air Line Tube near moving parts. Let Air Line tube hang unsecured from vehicle. Scar Air Line Tube while routing.

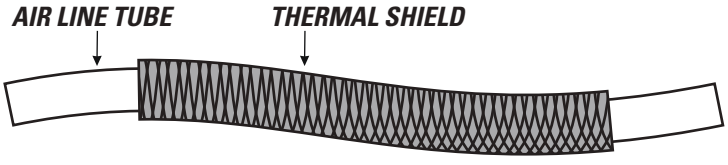

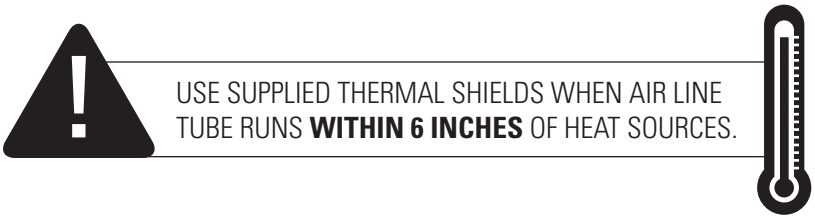

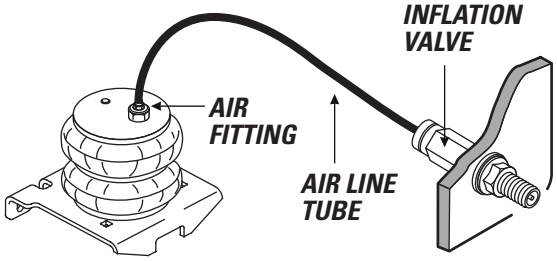

1 Place an air chuck onto the Inflation Valve and fill the system to **70 PSI**.

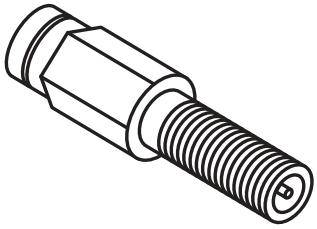



AIR SPRINGS INFLATE QUICKLY. CHECK AIR PRESSURE WHILE INFLATING.

2 Spray fittings with soap and water mixture.



3 Observe bubbles.

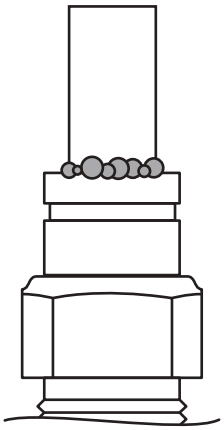

SMALL SOAP BUBBLES THAT DO NOT EXPAND



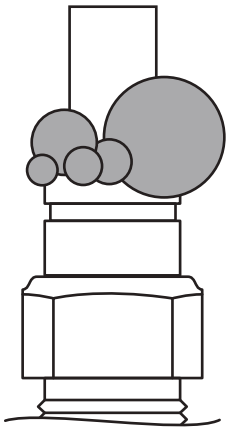

SOAP BUBBLES THAT EXPAND

X

NO LEAKS?

Congratulations! Continue to Step 13 to finish installation. Review the Operating Instructions.

LEAK?

Bummer. Continue to Step 12 to fix the leak.

12 FIXING AN AIR LEAK

1 Press the air valve on end of Inflation Valve to release all air pressure.

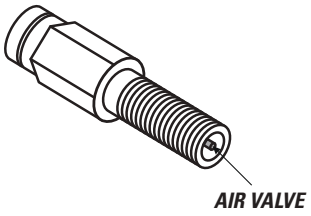



EXHAUST ALL AIR FROM THE SYSTEM PRIOR TO RELEASING AIR LINE TUBES FROM AIR FITTINGS.

LEAK AT AIR LINE TUBE AND AIR FITTING

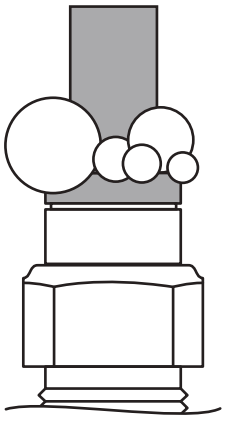

Release Air Line Tube (see page 11). Review proper cuts and procedures in Step 8. Repeat Steps 9 and 11.

LEAK AT BASE OF AIR FITTING ON AIR SPRING

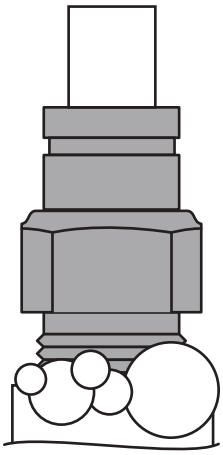

Tighten Air Fitting one turn or until leak stops.

LEAK OUT OF THE VALVE CORE ON INFLATION VALVE

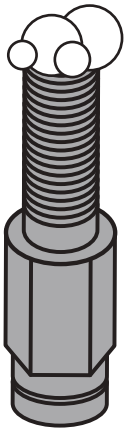

Tighten valve core with valve core wrench on Inflation Valve Cap.

STILL HAVE A LEAK?

Refer to the Troubleshooting section of the Instruction Manual. If the leak persists, or if there is an issue with a leaking part, call 1-800-888-0650; Option 1; Option 1 for Tech Support.

SAFELY RETURN VEHICLE TO OPERATIVE STATE

If you removed any wheels during installation, install the wheels and torque the lug nuts to the manufacturer's specifications.

Safely remove any jack stands and wheel chocks used during installation.

Re-attach the negative battery cable.

DOUBLE-CHECK AIR SPRING CLEARANCE

Check the Air Springs once again for the proper 1/2" minimum clearance. Perform clearance check again when vehicle is under load.

VEHICLE GVWR

NEVER exceed the maximum load recommended by the vehicle manufacturer (GVWR). The GVWR can be found in your vehicle's owner's manual or on the data plate on the driver's side door. Consult your local dealership for additional GVWR specifications.

READ AND UNDERSTAND THE OPERATING INSTRUCTIONS

The Ride-Rite system can improve handling and comfort. Take the time to learn how to properly use and maintain your investment by reading the Operating Instructions.



USE YOUR HAND TO CHECK FOR THE PROPER CLEARANCE AROUND THE AIR SPRING. IF YOUR HAND DOES NOT FIT BETWEEN THE AIR SPRING AND OTHER COMPONENTS, IT WILL RUB!

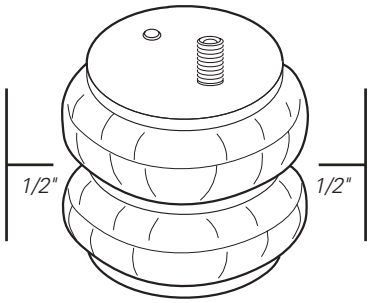

! IMPORTANT

A MINIMUM OF 5 PSI MUST BE MAINTAINED IN THE AIR SPRINGS AT ALL TIMES

Too much air pressure in the Air Springs will result in a firmer ride, while too little air pressure will allow the Air Springs to bottom out over rough conditions, and will not provide the improvement in handling that is possible.

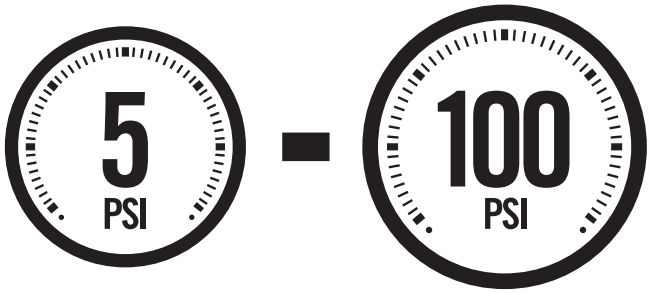

MINIMUM PRESSURE *MAXIMUM PRESSURE (LOADED)*

AIRIDE

firestoneairide.com

BEFORE YOU DRIVE, CONFIRM THE FOLLOWING:

- ☐ Do you have a minimum of 5PSI in your Air Springs?
- ☐ Are your Air Springs standing 5 1/2" - 6 1/2" tall?
- ☐ Are your Air Springs properly aligned, left-to-right and front-to-back?
- ☐ Are your nuts and bolts tight?
- ☐ Put your paper work back into the sleeve and keep it in your glove compartment for future reference.
- ☐ You've been bagged...and now your suspension is Airide™ equipped! Show it off with the supplied decal!

5 1/2" - 6 1/2"

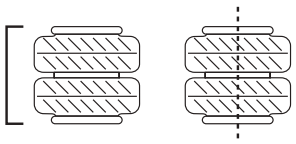

NEED INSTALLATION HELP?

Email us at **rrtech@fsip.com**. Please include photos, kit number, and the year, make, and model of the vehicle to help us better diagnose and understand any problems you may be experiencing.

2900

AIRIDE

firestoneairide.com

INSTALLATION INSTRUCTIONS

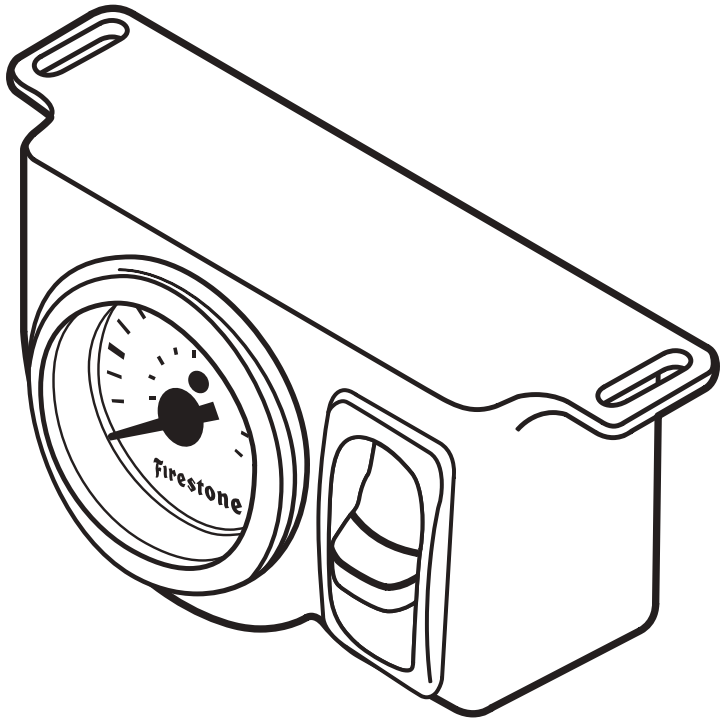

! IMPORTANT

PLEASE DON'T HURT YOURSELF, YOUR KIT OR YOUR VEHICLE. TAKE A MINUTE TO READ THIS IMPORTANT INFORMATION.

SAFE INSTALLATION

Please take all safety precautions during installation. A hydraulic jack can fail, and if that happens, you can be seriously hurt, or worse, if you are relying on it to hold up the vehicle. If you use a hydraulic jack, secure jack stands in the appropriate locations and chock any tires still touching the ground.

Wear safety glasses or goggles. Your eyes may be lower than some parts and pieces, and you don't want to lose an eye.

Remove the possibility of any electrical issues by disconnecting the negative battery cable.

VEHICLE GVWR

NEVER exceed the maximum load recommended by the vehicle manufacturer (GVWR). The GVWR can be found in your vehicle's owner's manual or on the data plate on the driver's side door. Consult your local dealership for additional GVWR specifications.

INFLATING THE AIR SPRINGS

When inflating air springs, add air pressure in small quantities, checking air pressure frequently. The air springs have much less air volume than a tire, so they inflate much more quickly.

PRESSURE TO LOAD

Be sure to review the load limits noted in the Air Spring Kit Installation Instructions (sold separately).

APPROPRIATE AIR PRESSURE

For best ride, use only enough air pressure in the air springs to level the vehicle when viewed from the side (front to rear). This will vary, depending on the load, location of the load, condition of the existing suspension, and personal preference.

ONCE INSTALLED SUCCESSFULLY, FOLLOW THE PRESSURE REQUIREMENTS FOR THE AIR SPRINGS:

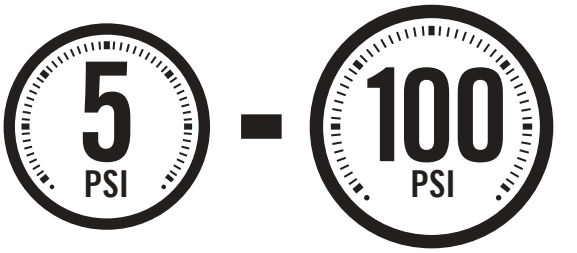

MINIMUM PRESSURE *MAXIMUM PRESSURE (LOADED)*

PARTS

Compare the parts below to your kit. Ensure you have all pieces, and organize them for an easier installation.

MAIN KIT CONTENTS

PT # 7550	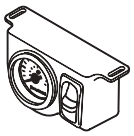 x 1 SINGLE AIR CONTROL PANEL	PT # 9523	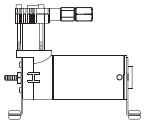 x 1 AIR COMPRESSOR	PT # 9307	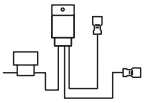 x 1 RELAY HARNESS
PT # 9416	 x 1 AIR LINE TUBE (30 FEET)				

A24-760-2635 COMPRESSOR MOUNTING KIT

KIT # 2635	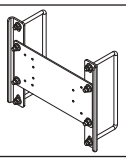 x 1 COMPRESSOR MOUNTING KIT *The parts list for this kit is in the Mounting Kit Manual included at the end of this Manual.*	

A21-760-2900 HARDWARE PACK

PT # 3087	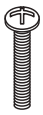 x 8 10-32 x 1" MACHINE SCREW	PT # 9078	 x 1 RED RING TERMINAL	PT # 3055	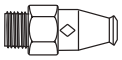 x 1 1/8 NPT PUSH-TO-CONNECT STRAIGHT FITTING
PT # 3088	 x 8 10-32 LOCK NUT	PT # 9083	 x 2 WIRE CONNECTOR	PT # 9041	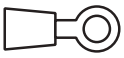 x 1 LARGE RING TERMINAL
PT # 3086	 x 16 #10 FLAT WASHER	PT # 3025	 x 2 PUSH-TO-CONNECT T-FITTING	PT # 9036	 x 15 NYLON TIE
PT # 3421	 x 1 10-16 x 3/4" SELF-TAPPING SCREW				

CONTENTS AND OVERVIEW

PAGE 4 PLANNING THE INSTALL

PAGE 5 PREPARE AIR COMPRESSOR & CONTROL PANEL

PAGE 6 DRILL HOLES FOR AIR COMPRESSOR INSTALLATION

PAGE 7 INSTALL THE AIR COMPRESSOR

PAGE 8 AIR COMPRESSOR TO CONTROL PANEL AIR LINE TUBE

PAGE 9 AIR SPRINGS TO CONTROL PANEL AIR LINE TUBE

PAGE 10 INSTALL RELAY HARNESS

PAGE 11 FINISH CONTROL PANEL WIRING & INSTALLATION

PAGE 12 INSTALL THE AIR FILTER & CLEAN UP INSTALLATION

PAGE 13 TEST THE SYSTEM

PAGE 14 FIXING AN AIR LEAK

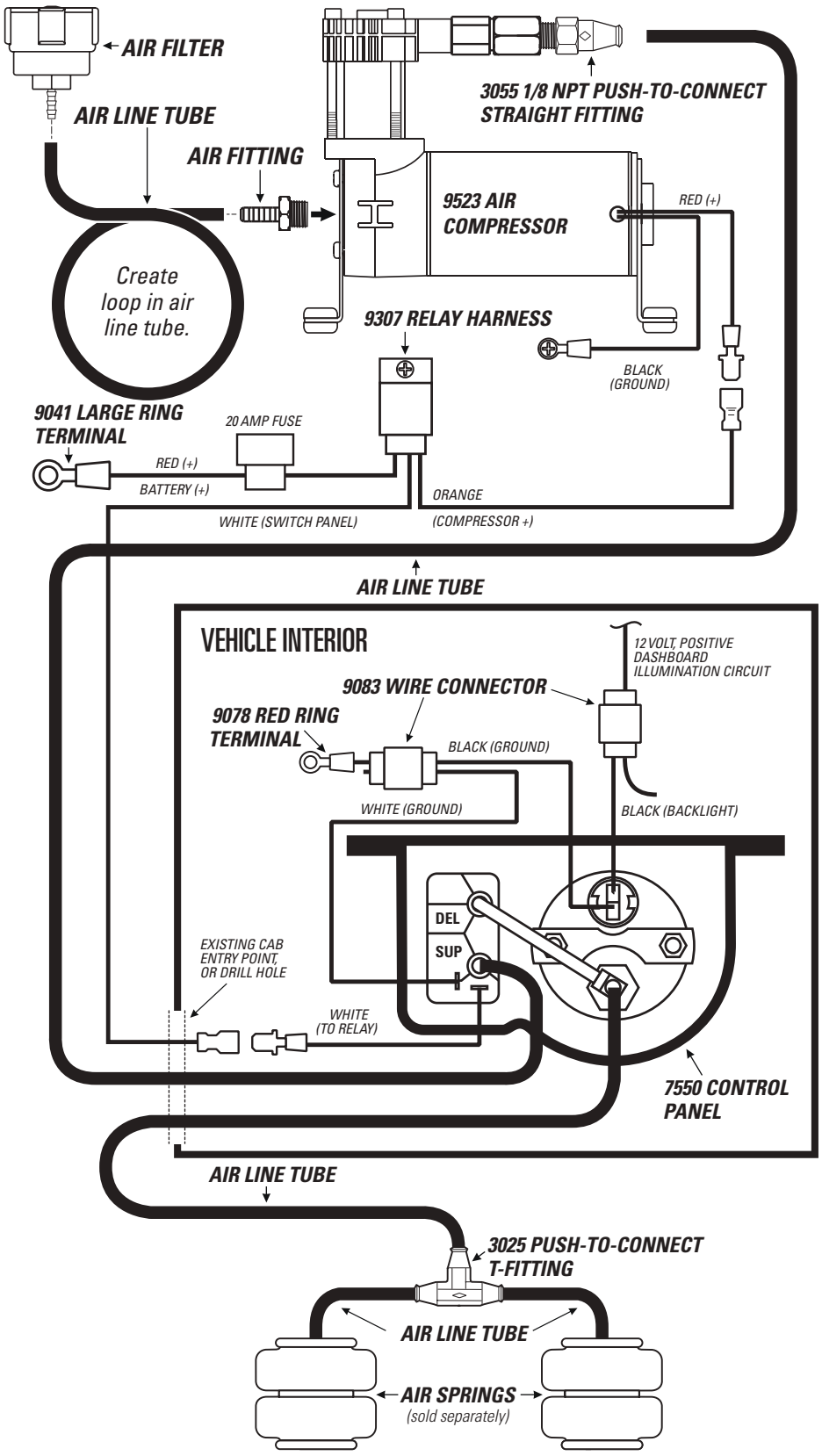

PLANNING THE INSTALL

THESE PLANNING STEPS WILL HELP YOU SAVE TIME AND WILL MAKE THE INSTALLATION EASIER.

DETERMINE THE MOUNTING LOCATION FOR THE CONTROL PANEL

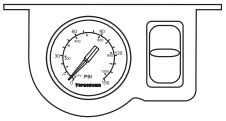

- Mount inside the vehicle cab, in a place where you will not hit or kick it.
- Allow room for the air line tube to run without sharp curves or bends.
- Do not obstruct your view or ability to safely operate the vehicle.

DETERMINE THE MOUNTING LOCATION FOR THE AIR COMPRESSOR

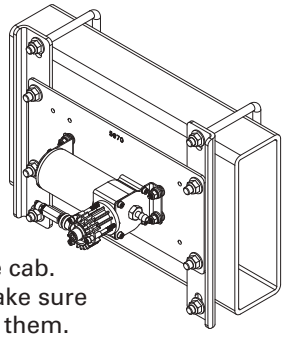

- Use the provided Mounting Kit (Part # 2635) to mount the Compressor, considering the guidelines below, and follow the kit's instructions.
- Provide ample air flow.
- Protect from airborne debris and moisture.
- Optionally you can drill holes to mount the compressor to the frame, see Section 3

PLAN INSTALLATION ROUTES FOR WIRING AND AIR LINES INTO CAB

- If possible, use existing factory grommet, such as where a wiring harness enters the cab.
- If not possible, drill a hole large enough for two air line tubes and a ground wire. Make sure the wiring and air line tubes are not exposed to sharp metal edges that can damage them.

SOAK AIR LINE TUBE ENDS IN HOT WATER BEFORE INSTALLING ONTO BARBED FITTINGS



- The hot water makes the air line tube easier to work with and enables it to shrink onto the barbed fitting for a better seal.

TAPE ALL ELECTRICAL CONNECTIONS

- Use electrical tape to appropriately secure and protect all electrical connections.

USING PUSH-TO-CONNECT FITTINGS FOR AIR LINES

Your kit includes push-to-connect fittings to connect the air line tubes to hardware. Use the instructions below when using the air line.

1 Insert end of air line tube into air fitting.

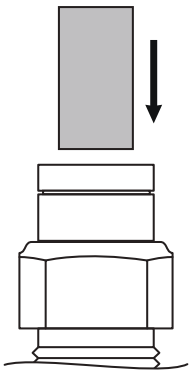

2 Push air line tube into air fitting as far as possible.

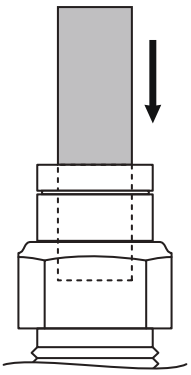

3 Gently pull on the air line tube to check for a secure fit.

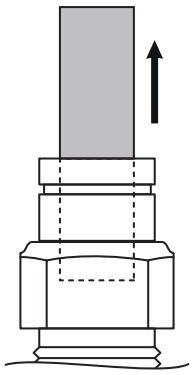

4 To remove, push down collar and gently pull air line tube away.

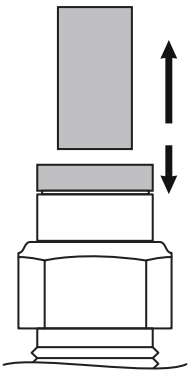

Removal Tip: Use a 1/4", 5/16", or 6mm open-ended wrench to push the collar down.

1 PREPARE THE AIR COMPRESSOR

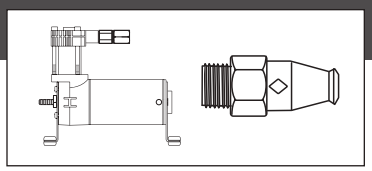

1 Install 1/8 NPT Push-to-Connect Straight Fitting on the Check Valve.

2 Install Barbed Air Fitting in Inlet Port of the Compressor from Air Compressor Kit.

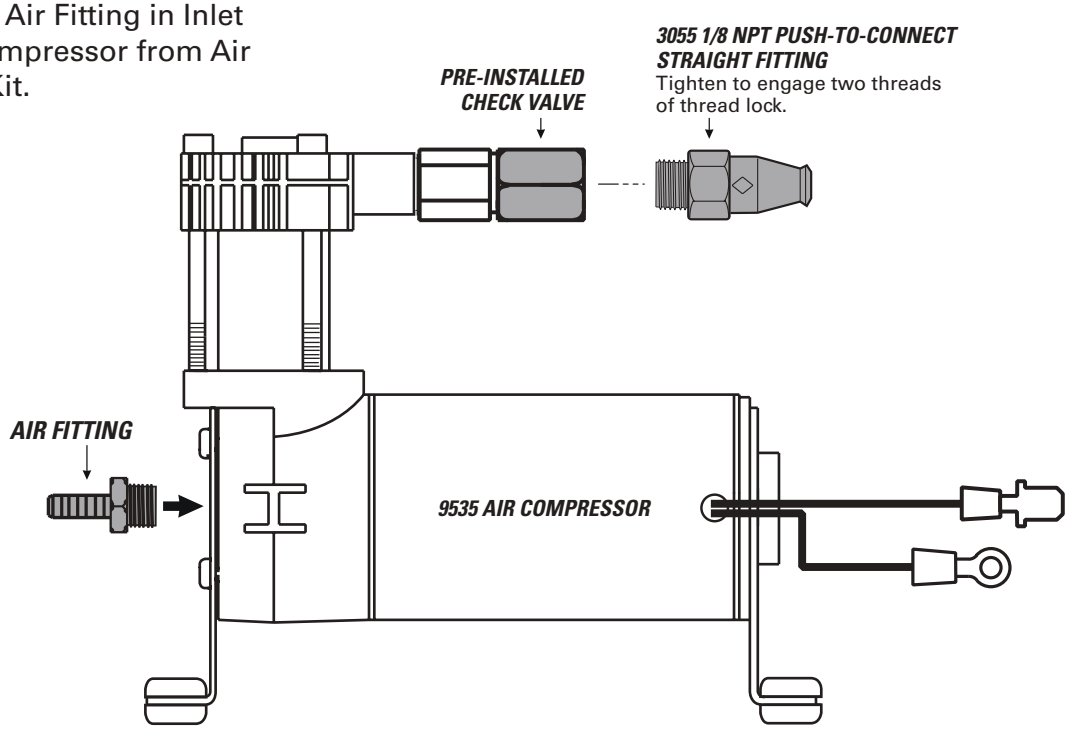

2 DRILL HOLES FOR CONTROL PANEL INSTALLATION

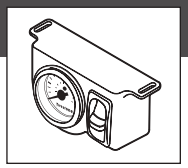

Use the location you selected during the Planning the Installation step on page 4.

1 Using the Control Panel slots as a template, mark two drill locations with a punch or marking tool.

2 Drill a 7/32" diameter hole on each center mark.

3 **Do not mount the control panel until step 8.**

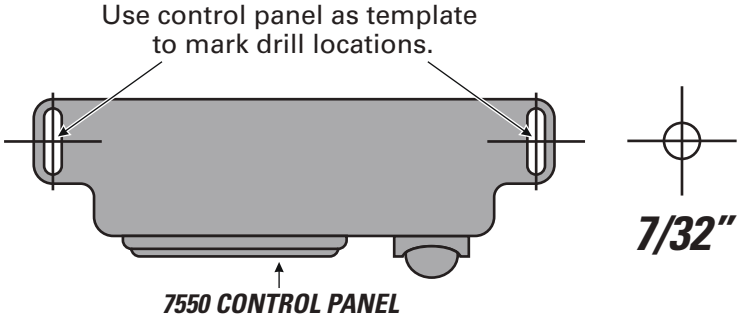

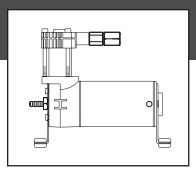

OPTIONAL - DRILL HOLES FOR AIR COMPRESSOR INSTALLATION

3

IF YOU ARE USING THE SUPPLIED FIRESTONE AIR ACCESSORY MOUNTING KIT, SKIP THIS STEP AND REFER TO THE MOUNTING KIT'S INSTRUCTIONS AT THE END OF THIS MANUAL..

STOP HERE AND SKIP THIS STEP IF USING THE PROVIDED MOUNTING KIT

CHECK SURROUNDING AREA AND BACK SIDE OF MOUNTING LOCATION TO AVOID DRILLING INTO EXISTING LINES OR WIRING.

1. Using the Air Compressor as a template, mark four drill locations with a punch or marking tool.
2. Mark ground wire fastening location within reach of the ground wire ring terminal.
3. Drill 7/32" diameter holes. Remove any burrs and debris from drill holes..

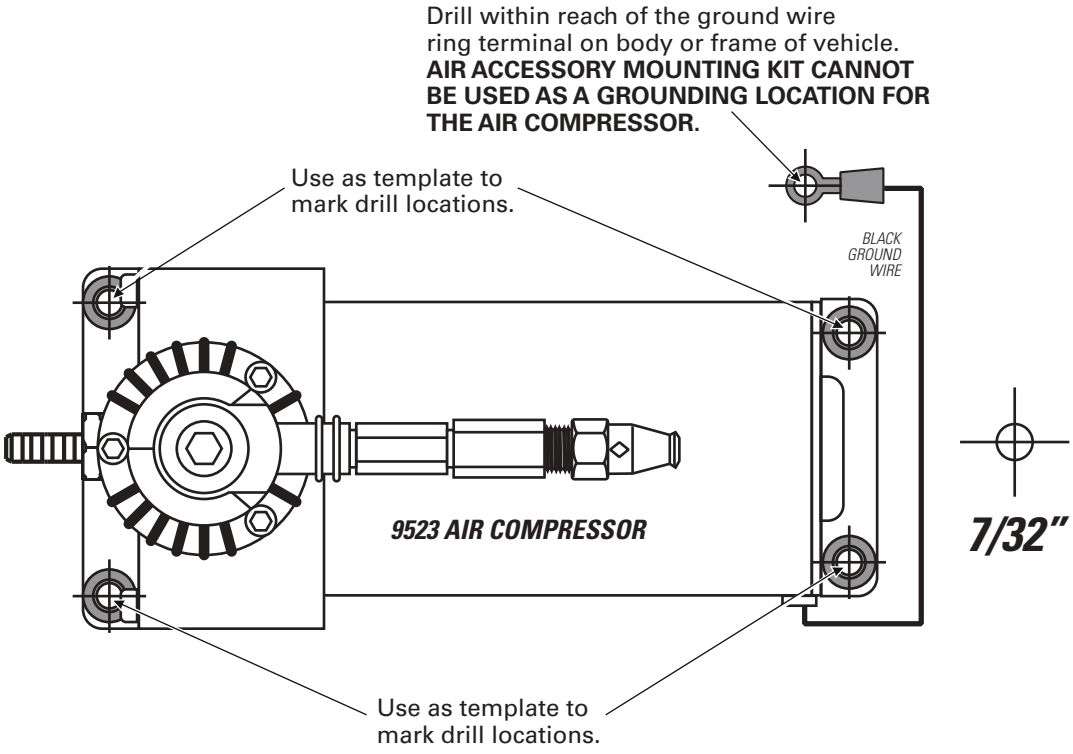

4 INSTALL AIR COMPRESSOR

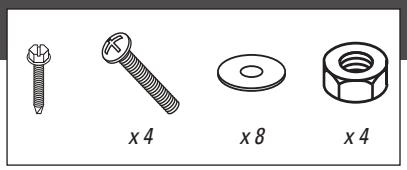

! DO NOT OVER TIGHTEN MOUNTING BOLTS AND NUTS. TOO MUCH TORQUE CAN CRUSH THE BRASS INSERTS AND RUBBER ISOLATORS.

1 Mount the Air Compressor to the hole locations on the provided Mounting Kit using the supplied fasteners.
DO NOT OVERTIGHTEN.

2 Mount the black ground wire ring terminal using the supplied fasteners. Assure that the ring terminal makes a solid contact with bare metal for a proper ground. (Optionally, you can run the negative wire to the negative battery terminal.)

OPTIONAL Mount to the drill holes made in the frame. Do this only if the mounting kit will not mount to the frame of the vehicle.

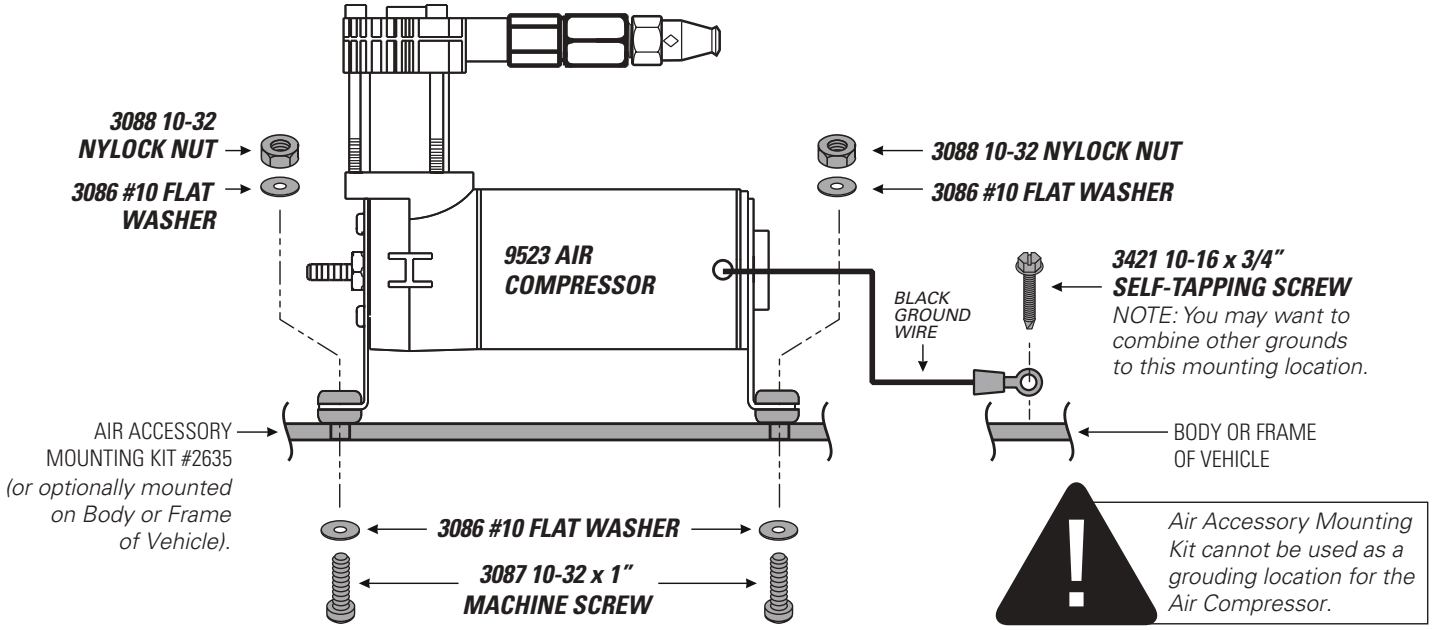

! *Air Accessory Mounting Kit cannot be used as a grouding location for the Air Compressor.*

! TO CREATE A PROPER GROUND, ASSURE THE GROUND RING TERMINAL CONTACTS BARE METAL AND IS FASTENED SECURELY. AFTER INSTALLATION, YOU MAY OPTIONALLY COAT THE RING TERMINAL IN SILICONE TO PROTECT IT FROM CORRODING.

ROUTE AIR LINE TUBE FROM AIR COMPRESSOR TO CONTROL PANEL 5

Use the route you selected during the Planning the Installation step on page 4.

EXHAUST ALL AIR FROM THE SYSTEM PRIOR TO RELEASING AIR TUBING FROM AIR FITTINGS. 0 PSI

1 Route the Air Tubing from the Air Compressor to the Control Panel, leaving room to secure line safely. Use guidelines below to cut.

2 Install the Air Tubing end onto the Barbed Fitting on the back of the Control Panel switch as shown.

3 Install the Air Tubing end into the 1/8 NPT Push-to-Connect Straight Fitting on the top of the Air Compressor.

5 MIN

FOR PROPER INSTALLATION, SOAK AIR LINE TUBE ENDS IN HOT WATER BEFORE INSTALLING ONTO BARBED FITTINGS.

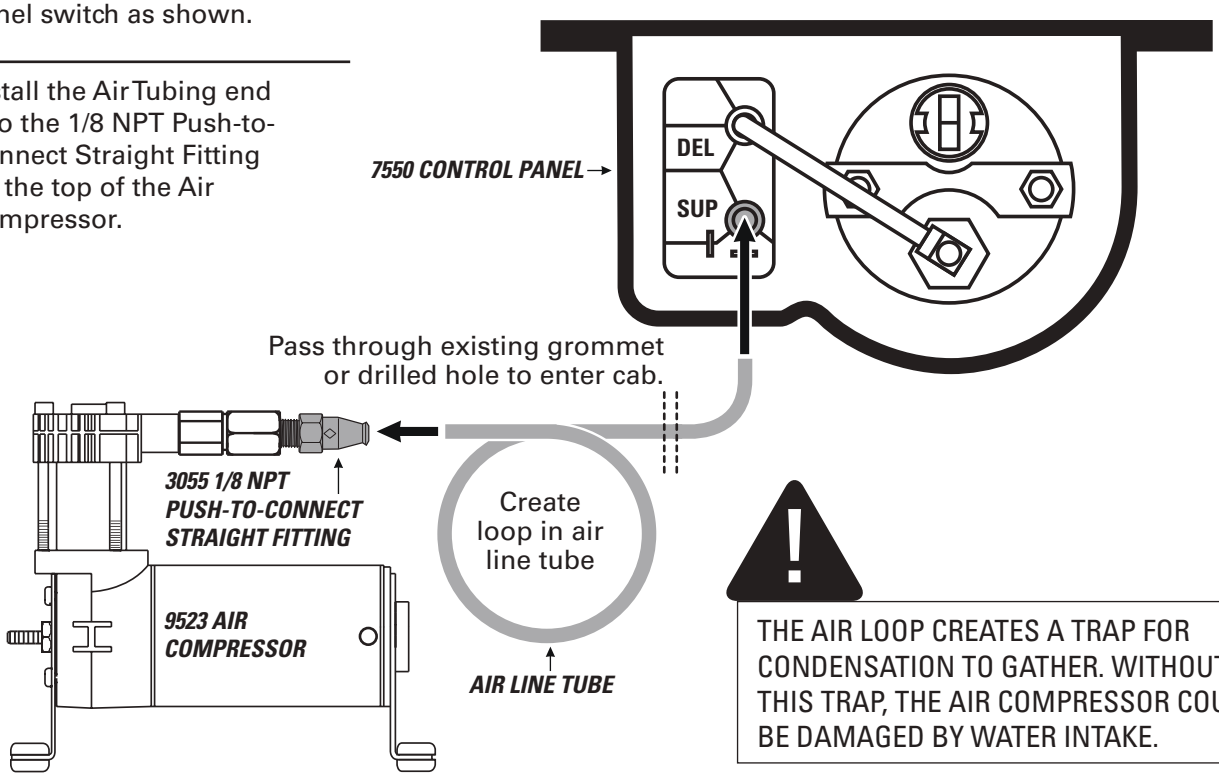

THE AIR LOOP CREATES A TRAP FOR CONDENSATION TO GATHER. WITHOUT THIS TRAP, THE AIR COMPRESSOR COULD BE DAMAGED BY WATER INTAKE.

DO	DON'T
Make sure the cut is as square as possible. Use a tube cutter or sharp utility knife.	Fold or kink the Air Tubing. Cut the Air Tubing at an angle. Use pliers, scissors, snips, saws, or side cutters

PROPER AND IMPROPER CUTS IN THE AIR LINE TUBE

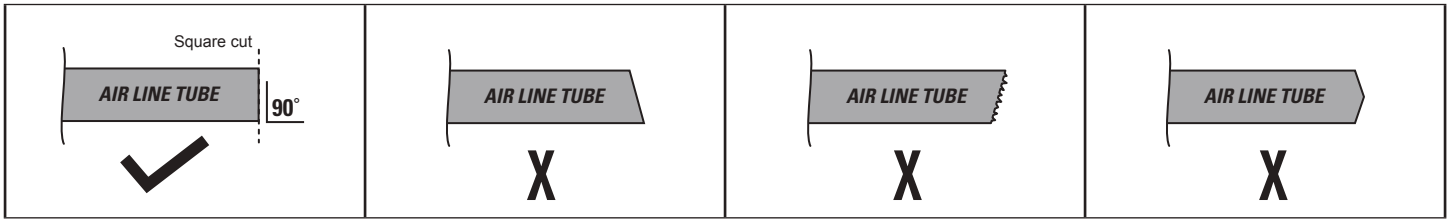

6 INSTALL T-FITTING AND ROUTE AIR LINE TUBE TO CONTROL PANEL

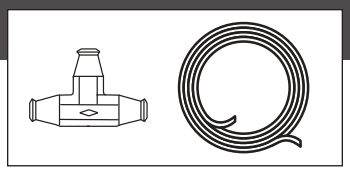

Use the route you selected during the Planning the Installation step on page 4.

EXHAUST ALL AIR FROM THE SYSTEM PRIOR TO RELEASING AIR TUBING FROM AIR FITTINGS.

0 PSI

5 MIN

FOR PROPER INSTALLATION, SOAK AIR LINE TUBE ENDS IN HOT WATER BEFORE INSTALLING ONTO BARBED FITTINGS.

1. Route the Air Tubing from the Control Panel to the Air Springs.
2. Install the Air Tubing end onto the Barbed Fitting on the back of the Control Panel pressure gauge as shown.
3. Determine a safe location for the Push-to-Connect T-fitting, where Air Tubing from the Air Springs and the Control Panel can safely meet.
4. Install the Air Tubing from the Air Springs into opposite ends on the Push-to-Connect T-fitting, as shown.
5. Install the Air Tubing from the Control Panel to the single end on the Push-to-Connect T-fitting.

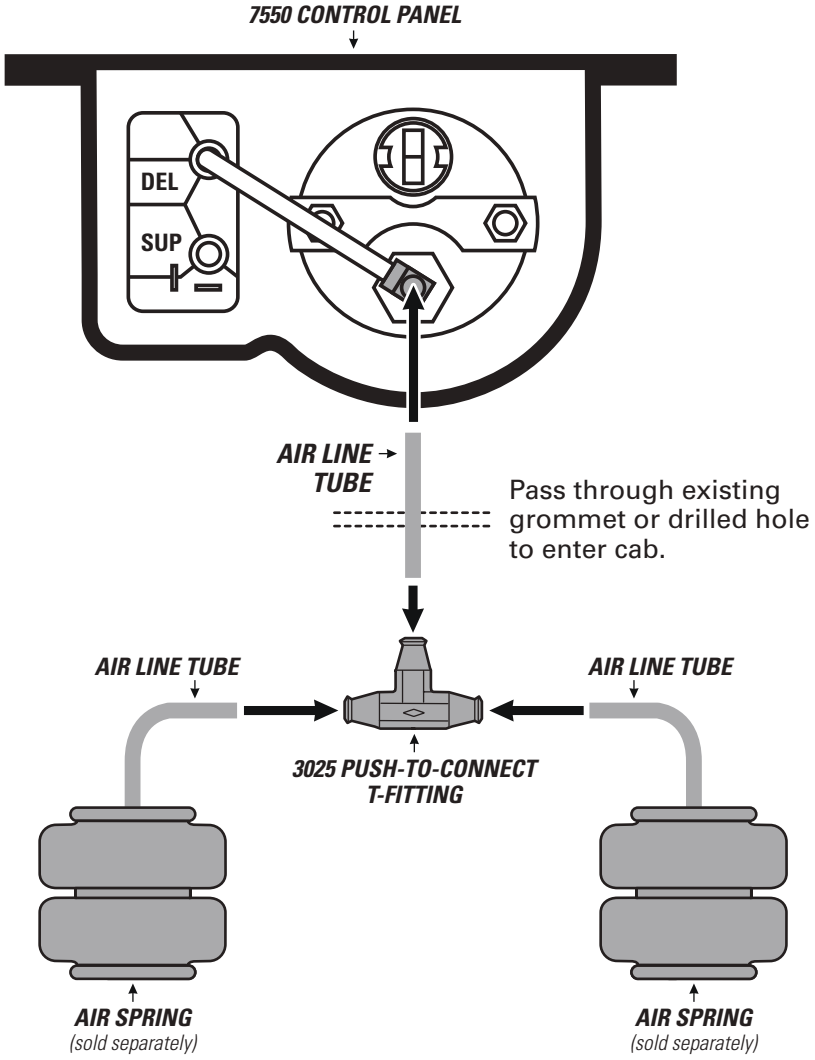

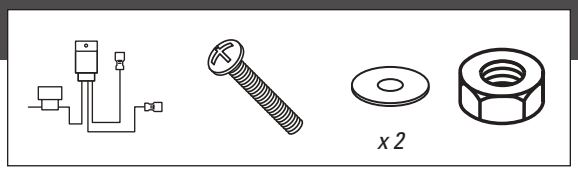

1 Select a safe location within 3 feet of the Air Compressor.

2 Use one of the unused holes on the Compressor Mounting Plate to mount the relay housing on the Relay Harness. Secure with fasteners shown.

Optionally: Mark and drill a 7/32" hole in the frame if unable to use mounting bracket.

3 Route the white wire with the female spade connector labeled “switch panel” to the Control Panel.

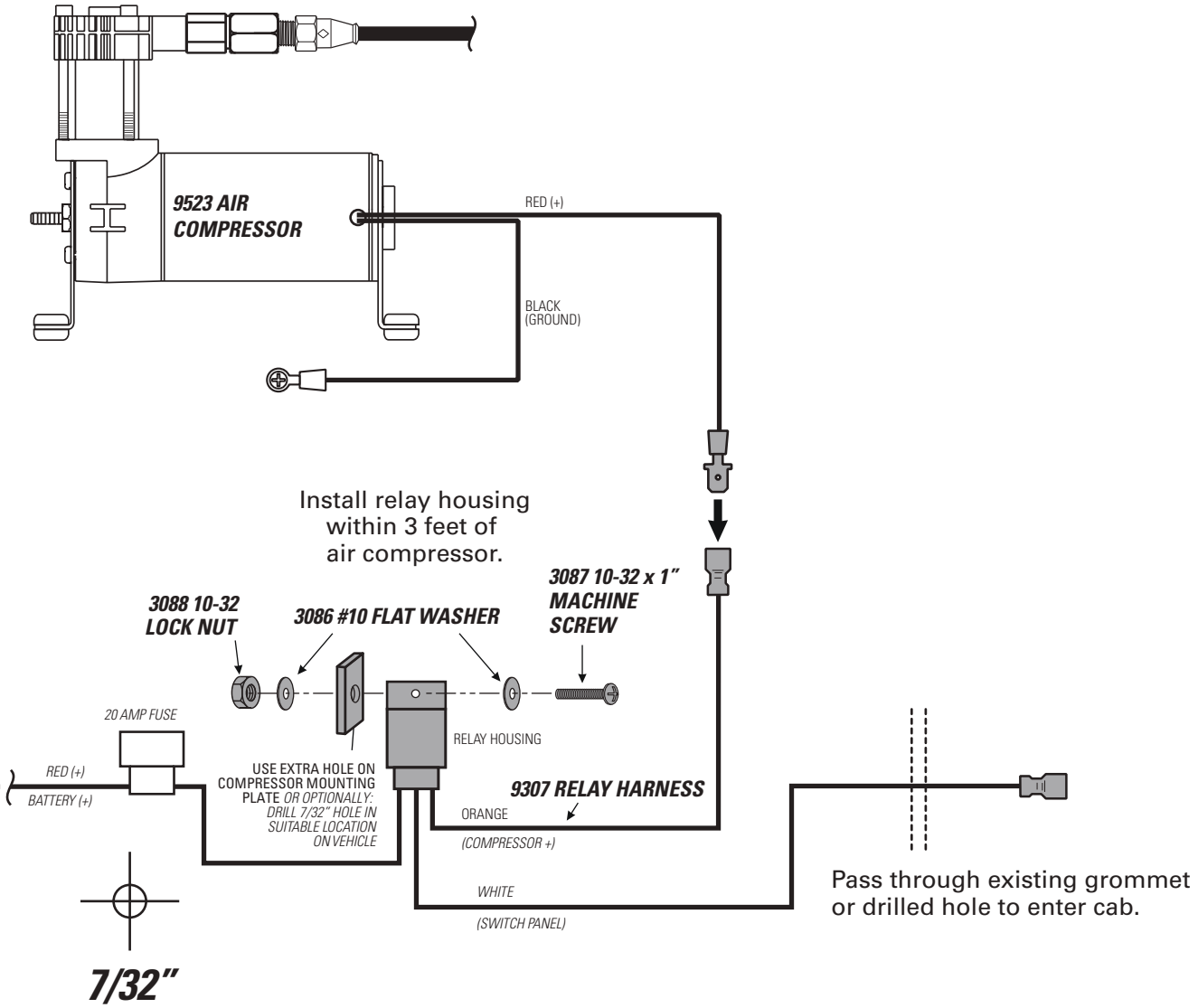

8 FINISH WIRING AND INSTALLATION

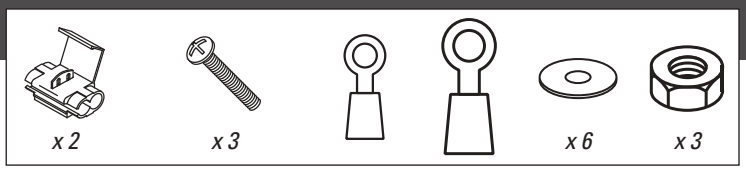

1 Connect wires, install ring terminals and wire connectors as shown below.

2 Fasten Control Panel ground wires to vehicle as shown.

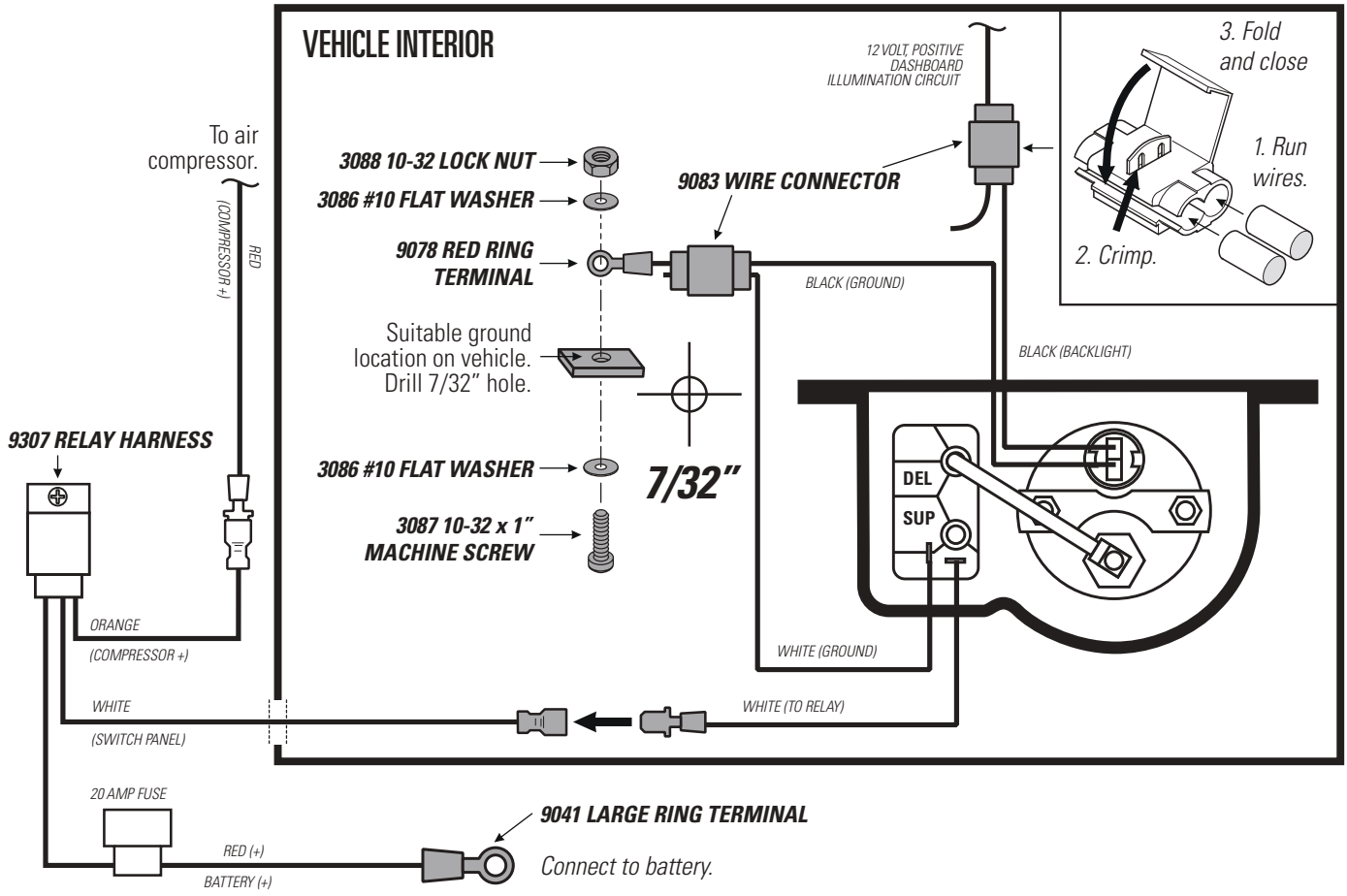

3 Install the Control Panel using the supplied fasteners.

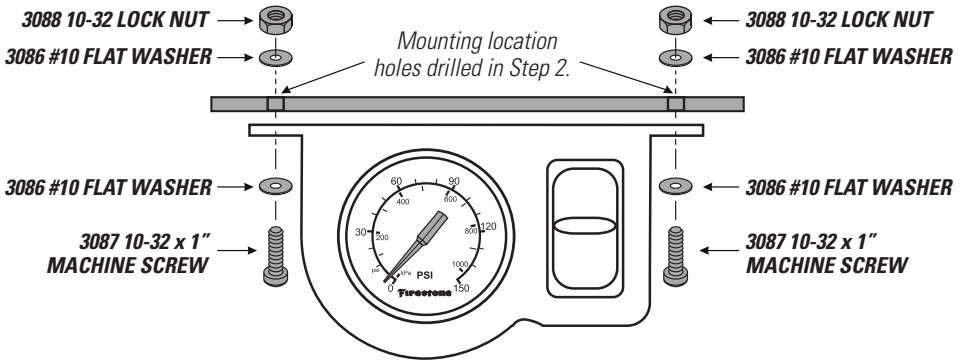

INSTALL THE AIR FILTER 9

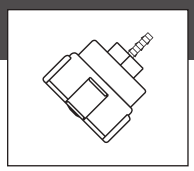

FILTER LIFE WILL VARY BASED ON ENVIRONMENTAL CONDITIONS. PROTECT THE AIR COMPRESSOR BY CHANGING THE AIR FILTER MORE FREQUENTLY IN DUSTY CONDITIONS.

1. Fully secure the Air Filter barb into the Air Tubing from the Air Compressor kit.
2. Press Air Tubing onto the barb on the Air Compressor Air Fitting until fully seated. Assure you create a loop in the Air Tubing, as shown, when securing it to the vehicle.
3. Periodically check the Air Filter during operation. When the Air Filter is dirty and needs to be replaced, contact an Authorized Firestone dealer to purchase a new one.

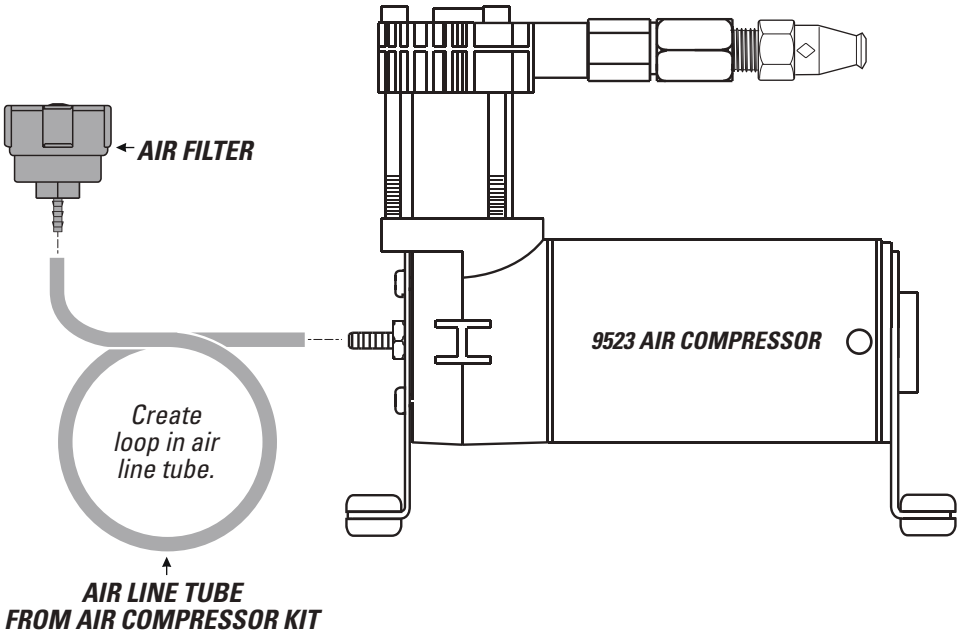

CLEAN UP INSTALLATION 10

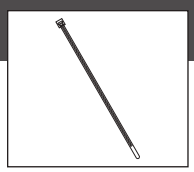

1. Clean up the installation using supplied Nylon ties, and return all factory parts and materials to operative state.

USING SUPPLIED NYLON TIES, SECURE ALL WIRING AND AIR LINE TUBE IN A MANNER THAT DOES NOT OBSTRUCT YOUR VIEW OR ABILITY TO SAFELY OPERATE THE VEHICLE.

11 TEST THE SYSTEM

With the Air Command™ kit and your air springs installed, you are ready to test the system.

1 Reattach the negative battery cable.

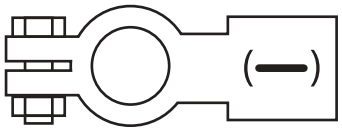

2 Turn on your vehicle's ignition.

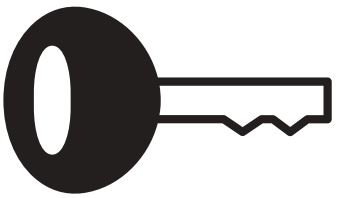

3 Push Paddle Switch up to inflate the Air Springs to 70 PSI.



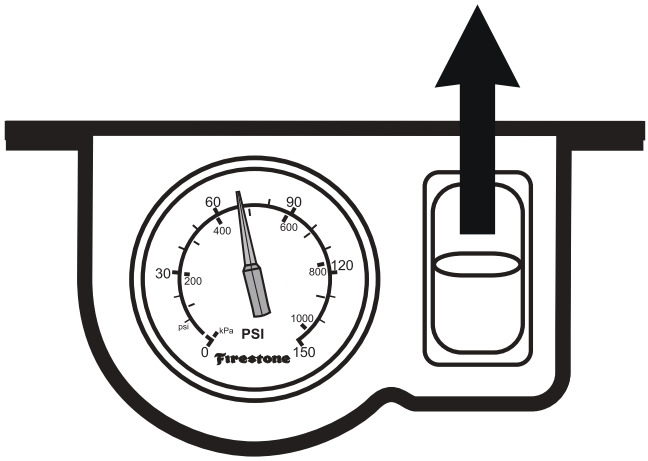

4 Spray fittings with soap and water mixture.



5 Observe bubbles.

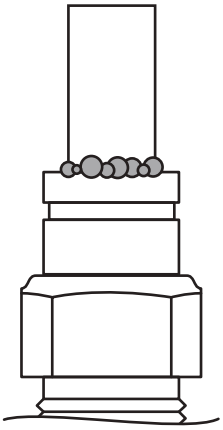

SMALL SOAP BUBBLES THAT DO NOT EXPAND

✓

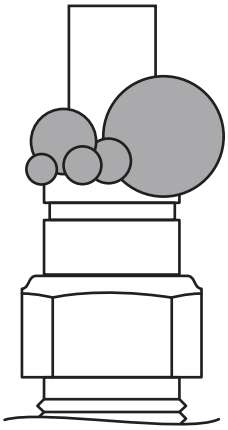

SOAP BUBBLES THAT EXPAND

X

NO LEAKS?

Congratulations! You're riding right with the flip of a switch! Remember to review the Operating Instructions.

LEAK?

Bummer. Continue to step 12 to fix the leak.

EXHAUST ALL AIR FROM THE SYSTEM PRIOR TO RELEASING AIR TUBING FROM AIR FITTINGS.

0 PSI

1 Push Paddle Switch down to release all air pressure from the Air Springs.

NOTE: While doing this, if you get a quick burst of air prior to the gauge dropping to 0 PSI, your lines are incorrectly swapped.

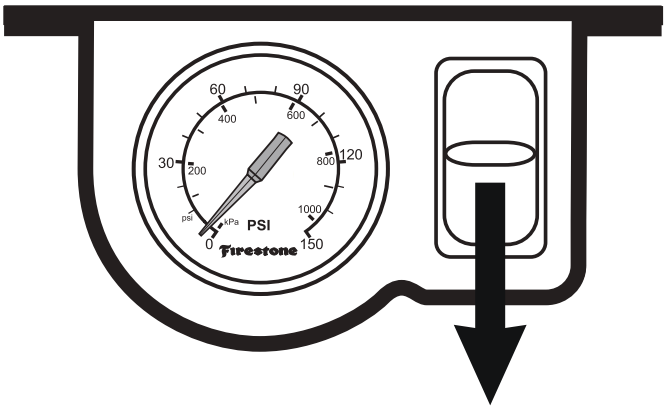

LEAK AT AIR LINE TUBE AND AIR FITTING

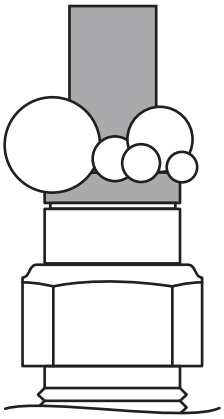

Release air line tube (see page 4). Review proper cuts and procedures in step 5. Repeat installation steps.

LEAK AT BASE OF AIR FITTING ON AIR SPRING

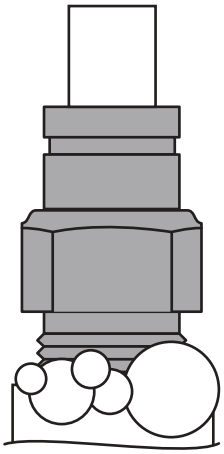

Tighten air fitting one turn or until leak stops.

LEAK AT A BARBED FITTING

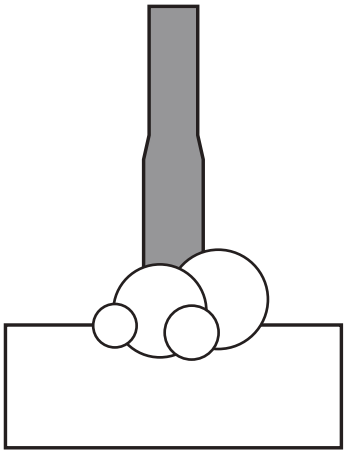

Being careful not to scar the metal barbs, cut away, check for debris. Trim air tube line, **soak for 5 minutes in hot water**. Reinstall.

STILL HAVE A LEAK?

Refer to the Troubleshooting section of the Instruction Manual. If the leak persists, or if there is an issue with a leaking part, email us at rrtech@fsip.com. If emailing, please include photos to help us better diagnose and understand any problems you may be experiencing.

AIRIDE

firestoneairide.com

BEFORE YOU DRIVE, CONFIRM THE FOLLOWING:

☐ Secure all air line tubes and wiring inside the cab and on the outside of the truck.
☐ Make sure no wiring, air line tubes, or hardware obstruct your vision or ability to safely operate the vehicle.
☐ The system passes the leak test and holds air.
☐ The air compressor ground ring terminal is contacting bare metal, and coated with silicone if possible.
☐ There is a loop in the air line tubes as shown to prevent water or debris from getting into the air compressor head and damaging it.
☐ The air gauge backlight turns off when the ignition is off, or when dashboard lights do not illuminate.
☐ Put a minimum of 5 PSI in the air springs, unloaded.

NEED INSTALLATION HELP?

Email us at **rrtech@fsip.com**. Please include photos, kit number, and the year, make, and model of the vehicle to help us better diagnose and understand any problems you may be experiencing.

2635

AIRIDE

firestoneairide.com

INSTALLATION INSTRUCTIONS

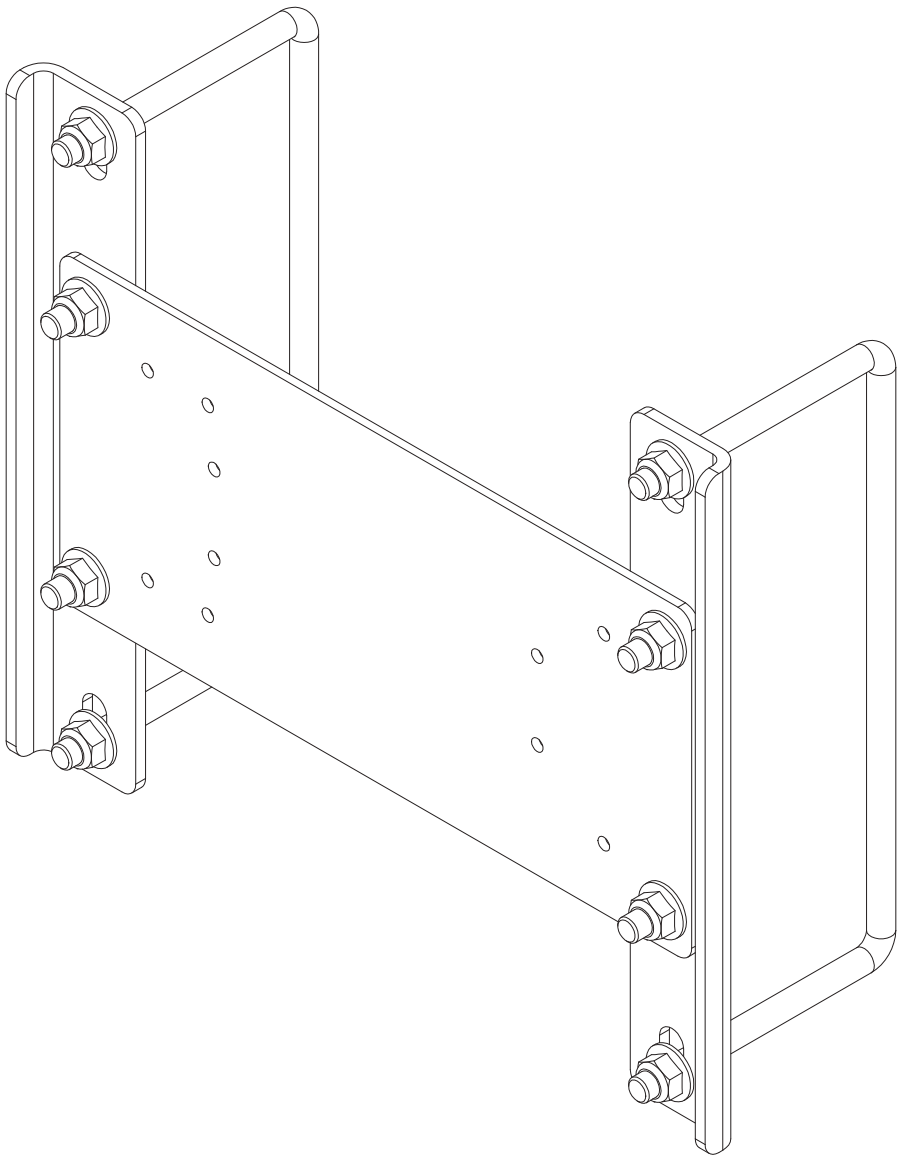

11-24

! IMPORTANT

PLEASE DON'T HURT YOURSELF, YOUR KIT OR YOUR VEHICLE. TAKE A MINUTE TO READ THIS IMPORTANT INFORMATION.

DO NOT INSTALL IF THE TRUCK HAS BEEN LIFTED AND THE STOCK JOUNCE BUMPER SPACERS ARE NOT ON THE VEHICLE. *This kit is to be used on a **pickup truck only**, and **DOES NOT INCREASE YOUR VEHICLE'S MAXIMUM LOAD.***

SAFE INSTALLATION

Please take all safety precautions during installation. A hydraulic jack can fail, and if that happens, you can be seriously hurt, or worse, if you are relying on it to hold up the vehicle. If you use a hydraulic jack, secure jack stands in the appropriate locations and chock any tires still touching the ground.

Wear safety glasses or goggles. Your eyes may be lower than some parts and pieces, and you don't want to lose an eye.

Remove the possibility of any electrical issues by disconnecting the negative battery cable.

KIT USES

This kit works with Air Command Kits 2900, 2901, 2910, and 2911. Refer to the following pages for kit-specific layouts to ensure proper fitment.

VEHICLE GVWR

NEVER exceed the maximum load recommended by the vehicle manufacturer (GVWR). The GVWR can be found in your vehicle's owner's manual or on the data plate on the driver's side door.

INFLATING THE AIR SPRINGS

When inflating air springs, add air pressure in small quantities, checking air pressure frequently. The air springs have much less air volume than a tire, so they inflate much more quickly.

APPROPRIATE AIR PRESSURE

For best ride, use only enough air pressure in the air springs to level the vehicle when viewed from the side (front to rear). This will vary, depending on the load, location of the load, condition of the existing suspension, and personal preference.

PARTS

Compare the parts below to your kit. Ensure you have all pieces, and organize them for an easier installation.

MAIN KIT CONTENTS

PT # 5970	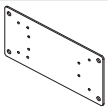	*x 1 COMPRESSOR MOUNTING PLATE*	PT # 5705	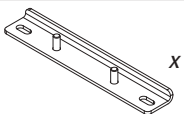	*x 2 AIR ACCESSORY FRAME BRACKET*
PT # 3414		*x 2 BAIL CLAMP*			

A21-760-2497 HARDWARE PACK

PT # 3067		*x 8 3/8"-16 HEX HEAD FLANGE NYLOCK NUT*

1 Secure the Compressor Mounting Plate to the System Frame Brackets shown below.

2 Select a suitable location for installation on the vehicle frame rail.

It is recommended to mount to the passenger side frame rail as the vehicle's battery is normally located in the engine compartment on the passenger side. Double check before final installation.

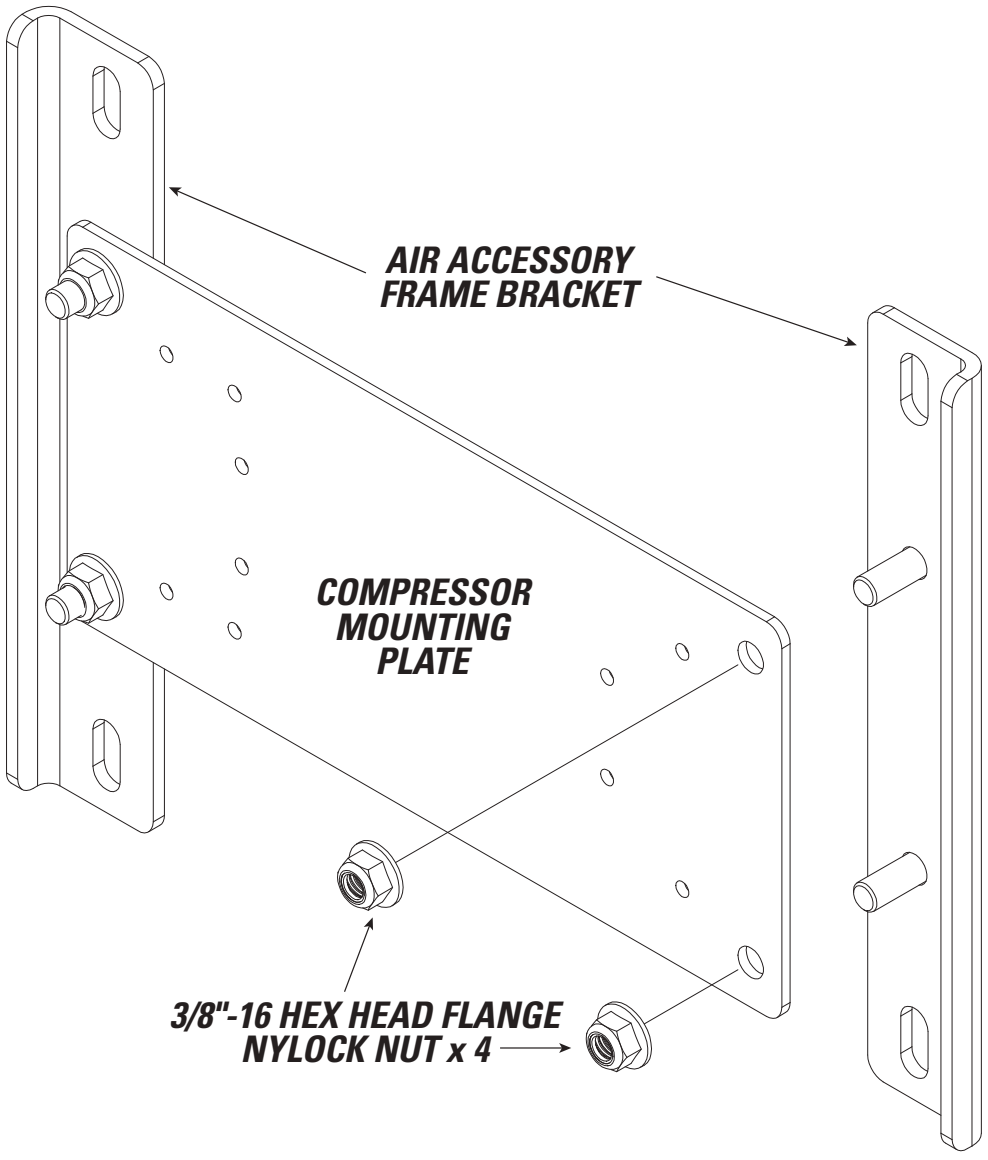

2 INSTALL THE AIR COMPRESSOR - **USE FOR STANDARD DUTY AIR COMMAND KITS 2900 & 2910**

Fasteners included in Air Command Kit

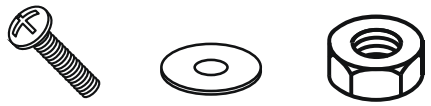

DO NOT OVER TIGHTEN MOUNTING BOLTS AND NUTS ON THE AIR COMPRESSOR. TOO MUCH TORQUE CAN CRUSH THE BRASS INSERTS AND RUBBER ISOLATORS.

1 Mount the Air Compressor to the hole locations in the Compressor Plate using the supplied fasteners. DO NOT OVERTIGHTEN.

2 It is recommended to face the outlet of the compressor towards the air springs on the rear axle of vehicle.

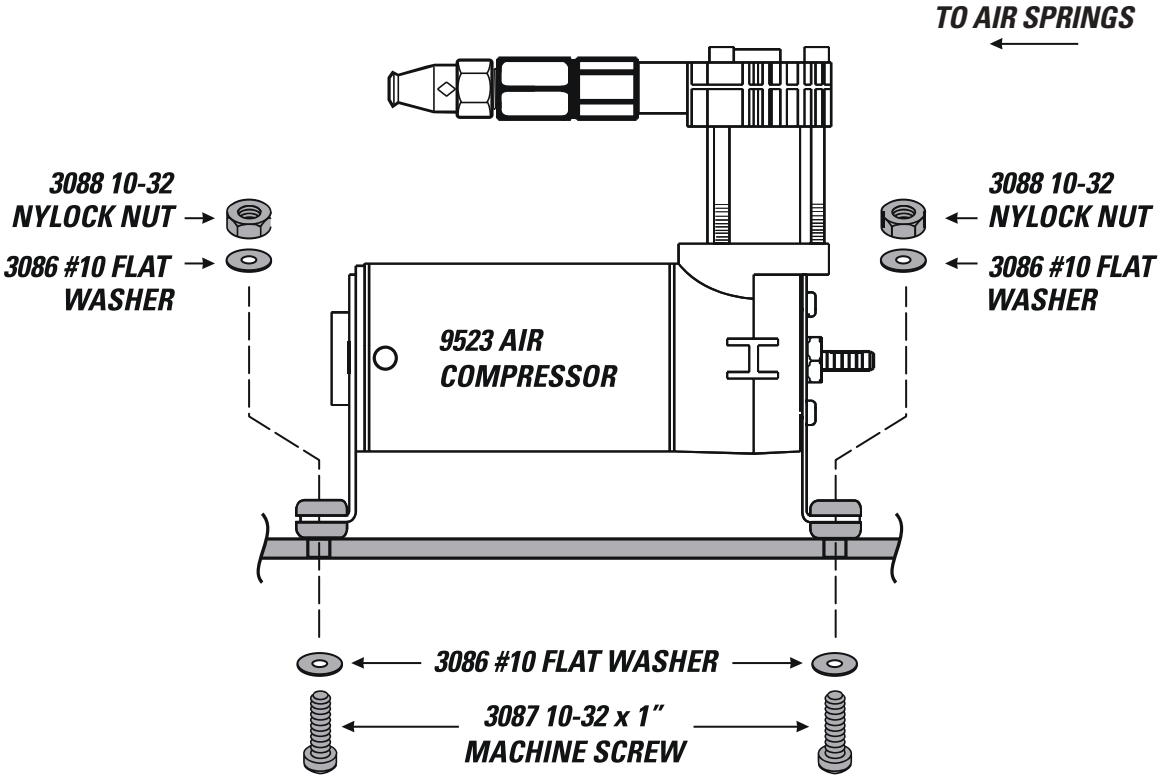

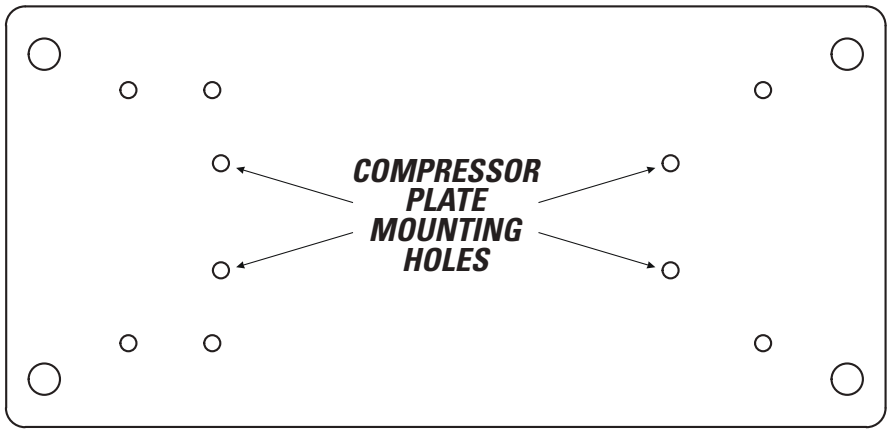

AIR ACCESSORY MOUNTING KIT CANNOT BE USED AS A GROUNDING LOCATION FOR THE AIR COMPRESSOR

1 Install the compressor mounting assembly to the vehicle's frame rail, using the provided Bail Clamps.

RECOMMENDED

2 Continue following the Air Command Kit instructions to connect all air tubing and electrical wiring.

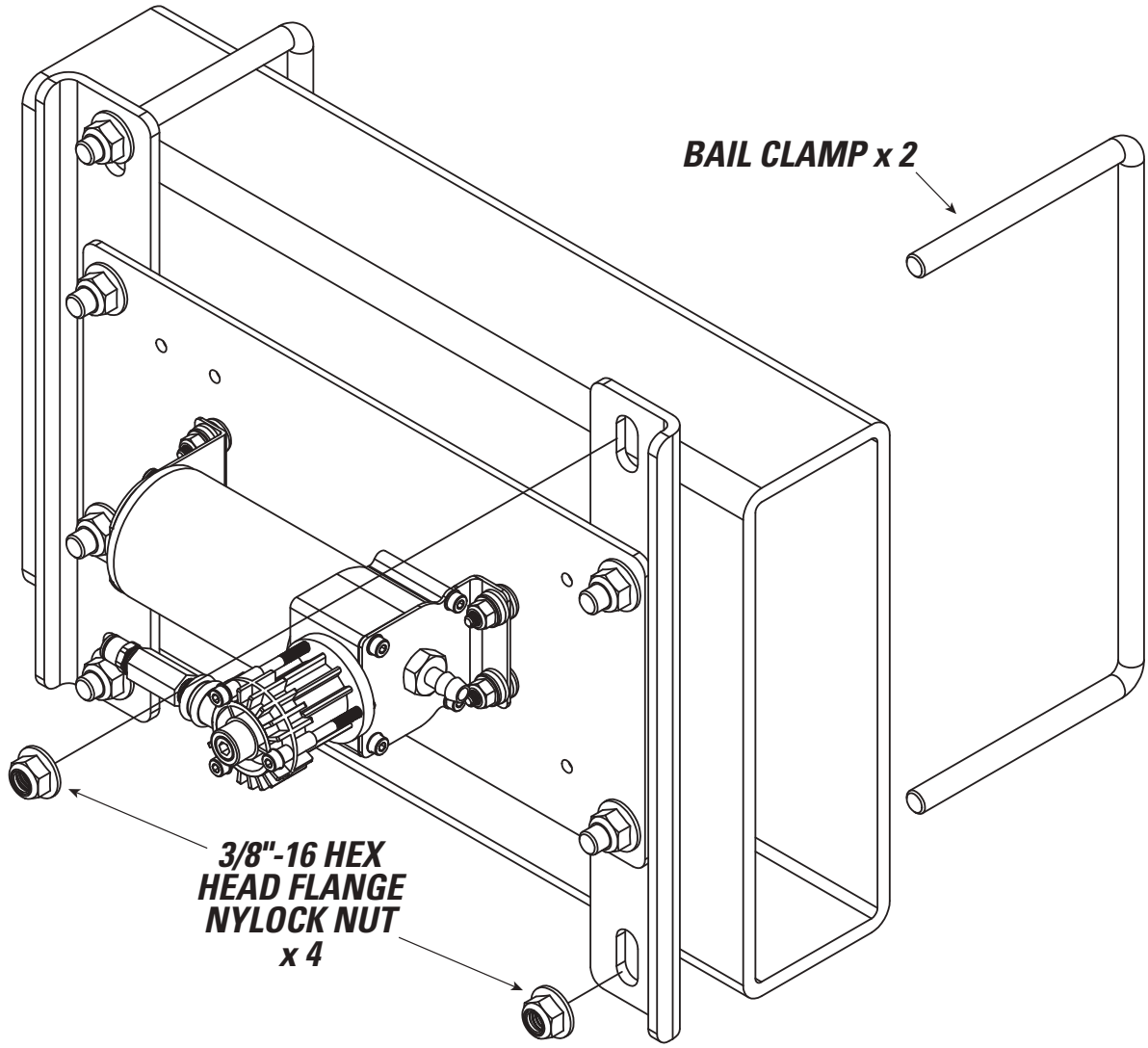

NOTES

AIRIDE

firestoneairide.com

BEFORE YOU DRIVE, CONFIRM THE FOLLOWING:

☐ Make sure all fasteners are tight and secure.

☐ Make sure the installation does not interfere with any other components on the vehicle.

☐ Reattach negative battery cable.

NEED INSTALLATION HELP?

Email us at **rrtech@fsip.com**. Please include photos, kit number, and the year, make, and model of the vehicle to help us better diagnose and understand any problems you may be experiencing.